MITSUBISHI

Type A2USHCPU-S1/A2USCPU(S1)/A2ASCPU(S1/S30)

User's Manual

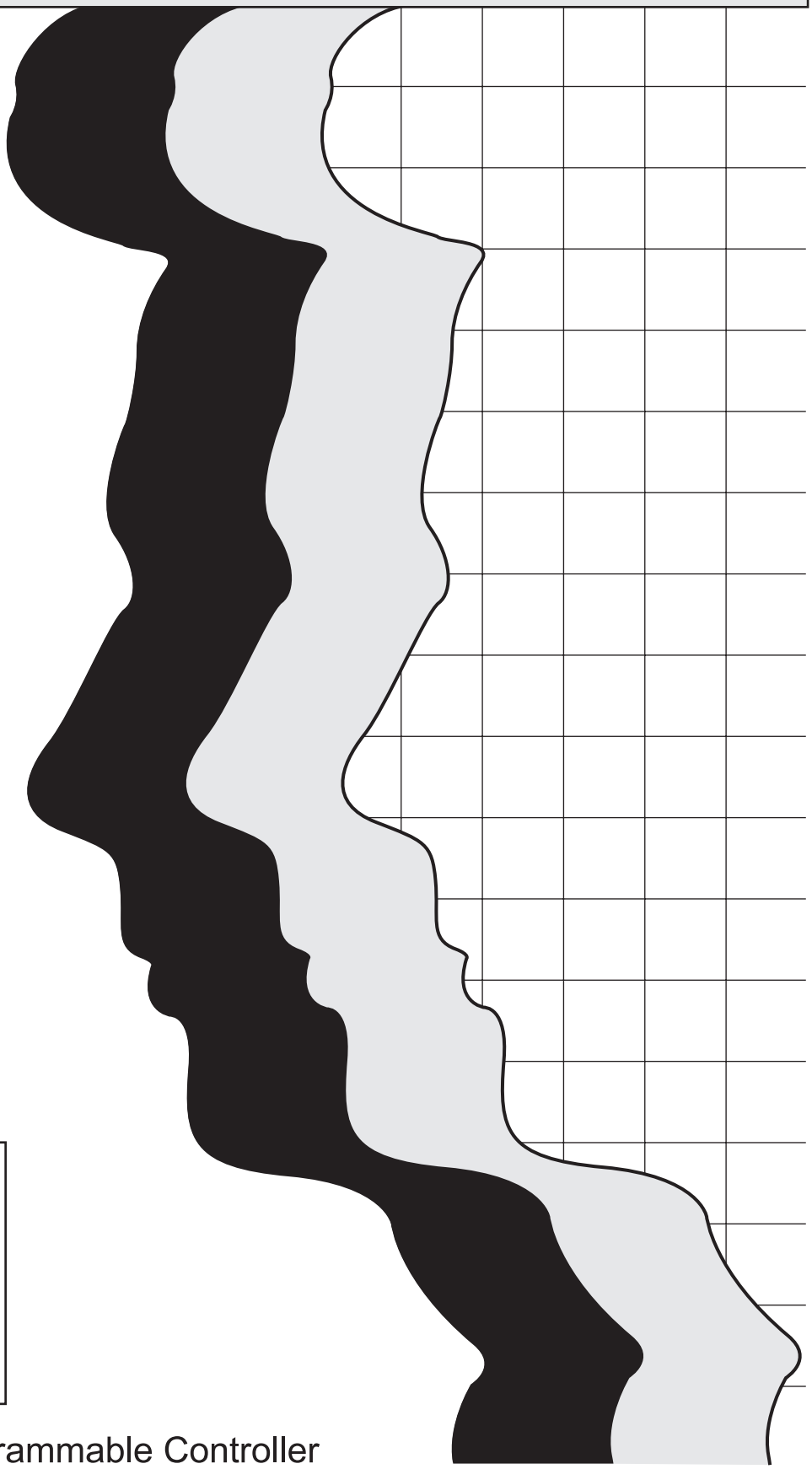

A

MELSEC

Mitsubishi Programmable Controller

● SAFETY PRECAUTIONS ●

(Be sure to read these instructions before use.)

Before using the product, read this and relevant manuals carefully and handle the product correctly with full attention to safety.
In this manual, ●SAFETY PRECAUTIONS● are classified into 2 levels: "DANGER" and "CAUTION".

⚠ DANGER	Indicates that incorrect handling may cause hazardous conditions, resulting in death or severe injury.
⚠ CAUTION	Indicates that incorrect handling may cause hazardous conditions, resulting in minor or moderate injury and/or property damage.

Under some circumstances, failure to observe the ⚠ CAUTION level instructions may also lead to serious results.
Be sure to observe the instructions of both levels to ensure the safety.

Please keep this manual in a safe place for future reference and also pass this manual on to the end user.

[DESIGN PRECAUTIONS]

⚠ DANGER

● Create a safety circuit outside the PLC to ensure the whole system will operate safely even if an external power failure or a PLC failure occurs.
Otherwise, incorrect output or malfunction may cause an accident.

(1) For an emergency stop circuit, protection circuit and interlock circuit that is designed for incompatible actions such as forward/reverse rotation or for damage prevention such as the upper/lower limit setting in positioning, any of them must be created outside the PLC.

(2) When the PLC detects the following error conditions, it stops the operation and turn off all the outputs.
- The overcurrent protection device or overvoltage protection device of the power supply module is activated.
- The PLC CPU detects an error such as a watchdog timer error by the self-diagnostics function.

In the case of an error of a part such as an I/O control part that cannot be detected by the PLC CPU, all the outputs may turn on. In order to make all machines operate safely in such a case, set up a fail-safe circuit or a specific mechanism outside the PLC. Refer to "LOADING AND INSTALLATION" in this manual for example fail safe circuits.

(3) Depending on the failure of the output module's relay or transistor, the output status may remain ON or OFF incorrectly.
For output signals that may lead to a serious accident, create an external monitoring circuit.

[DESIGN PRECAUTIONS]

⚠ DANGER

- If load current more than the rating or overcurrent due to a short circuit in the load has flowed in the output module for a long time, it may cause a fire and smoke. Provide an external safety device such as a fuse.

- Design a circuit so that the external power will be supplied after power-up of the PLC.
  Activating the external power supply prior to the PLC may result in an accident due to incorrect output or malfunction.

- For the operation status of each station at a communication error in data link, refer to the respective data link manual.
  The communication error may result in an accident due to incorrect output or malfunction.

- When controlling a running PLC (data modification) by connecting a peripheral device to the CPU module or a PC to a special function module, create an interlock circuit on sequence programs so that the whole system functions safely all the time.
  Also, before performing any other controls (e.g. program modification, operating status change (status control)), read the manual carefully and ensure the safety.
  In these controls, especially the one from an external device to a PLC in a remote location, some PLC side problem may not be resolved immediately due to failure of data communications.
  To prevent this, create an interlock circuit on sequence programs and establish corrective procedures for communication failure between the external device and the PLC CPU.

- When setting up the system, do not allow any empty slot on the base unit.
  If any slot is left empty, be sure to use a blank cover (A1SG60) or a dummy module (A1SG62) for it.
  When using the extension base unit, A1S52B(S1), A1S55B(S1) or A1S58B(S1), attach the included dustproof cover to the module in slot 0.
  Otherwise, internal parts of the module may be flied in the short circuit test or when an overcurrent or overvoltage is accidentally applied to external I/O section.

[DESIGN PRECAUTIONS]

⚠ CAUTION

- Do not install the control lines or communication cables together with the main circuit or power lines, or bring them close to each other.
  Keep a distance of 100mm (3.94inch) or more between them.
  Failure to do so may cause malfunctions due to noise.

- When an output module is used to control the lamp load, heater, solenoid valve, etc., a large current (ten times larger than the normal one) may flow at the time that the output status changes from OFF to ON. Take some preventive measures such as replacing the output module with the one of a suitable current rating.

[INSTALLATION PRECAUTIONS]

⚠ CAUTION

- Use the PLC under the environment specified in the user's manual.
  Otherwise, it may cause electric shocks, fires, malfunctions, product deterioration or damage.

- Insert the module fixing projection into the fixing hole in the base unit and then tighten the module mounting screw within the specified torque.
  When no screw is tightened, even if the module is installed correctly, it may cause malfunctions, a failure or a drop of the module.
  If too tight, it may damage the screw and/or the module, resulting in a drop of the module, a short circuit or malfunctions.

- Connect the extension cable to the connector of the base unit or module.
  Check the cable for incomplete connection after connecting it.
  Poor electrical contact may cause incorrect inputs and/or outputs.

- Insert the memory cassette and fully press it to the memory cassette connector.
  Check for incomplete connection after installing it.
  Poor electrical contact may cause malfunctions.

- Be sure to shut off all phases of the external power supply used by the system before mounting or removing the module.
  Failure to do so may damage the module.

- Do not directly touch the conductive part or electronic components of the module.
  Doing so may cause malfunctions or a failure of the module.

[WIRING PRECAUTIONS]

⚠ DANGER

- Be sure to shut off all phases of the external power supply used by the system before wiring.
  Failure to do so may result in an electric shock or damage of the product.

- Before energizing and operating the system after wiring, be sure to attach the terminal cover supplied with the product.
  Failure to do so may cause an electric shock.

⚠ CAUTION

- Always ground the FG and LG terminals to the protective ground connector.
  Failure to do so may cause an electric shock or malfunctions.

- Wire the module correctly after confirming the rated voltage and terminal layout.
  Connecting a power supply of a different voltage rating or incorrect wiring may cause a fire or failure.

- Do not connect multiple power supply modules to one module in parallel.
  The power supply modules may be heated, resulting in a fire or failure.

- Press, crimp or properly solder the connector for external connection with the specified tool.
  Incomplete connection may cause a short circuit, fire or malfunctions.

- Tighten terminal screws within the specified torque range.
  If the screw is too loose, it may cause a short circuit, fire or malfunctions.
  If too tight, it may damage the screw and/or the module, resulting in a drop of the module, a short circuit or malfunctions.

- Carefully prevent foreign matter such as dust or wire chips from entering the module.
  Failure to do so may cause a fire, failure or malfunctions.

- Install our PLC in a control panel for use.
  Wire the main power supply to the power supply module installed in a control panel through a distribution terminal block.
  Furthermore, the wiring and replacement of a power supply module have to be performed by a maintenance worker who acquainted with shock protection.
  (For the wiring methods, refer to Section 8.7.)

[STARTUP AND MAINTENANCE PRECAUTIONS]

⚠ DANGER

- Do not touch any terminal during power distribution.
  Doing so may cause an electric shock.

- Properly connect batteries.
  Do not charge, disassemble, heat or throw them into the fire and do not make them short-circuited and soldered.
  Incorrect battery handling may cause personal injuries or a fire due to exothermic heat, burst and/or ignition.

- Be sure to shut off all phases of the external power supply used by the system before cleaning or retightening the terminal screws or module mounting screws.
  Failure to do so may result in an electric shock.
  If they are too loose, it may cause a short circuit or malfunctions.
  If too tight, it may cause damage the screw and/or module, resulting in a drop of the module, a short circuit or malfunctions.

⚠ CAUTION

- When performing online operations (especially, program modification, forced output or operating status change) by connecting a peripheral device to the running CPU module, read the manual carefully and ensure the safety.
  Incorrect operation will cause mechanical damage or accidents.

- Do not disassemble or modify each of modules.
  Doing so may cause failure, malfunctions, personal injuries and/or a fire.

- When using a wireless communication device such as a mobile phone, keep a distance of 25cm (9.84inch) or more from the PLC in all directions.
  Failure to do so may cause malfunctions.

- Be sure to shut off all phases of the external power supply used by the system before mounting or removing the module.
  Failure to do so may result in failure or malfunctions of the module.

- Do not drop or apply any impact to the battery.
  Doing so may damage the battery, resulting in electrolyte spillage inside the battery.
  If any impact has been applied, discard the battery and never use it.

- Do not mount/remove the module onto/from base unit more than 50 times (IEC61131-2-compliant), after the first use of the product.

- Before handling modules, touch a grounded metal object to discharge the static electricity from the human body.
  Failure to do so may cause failure or malfunctions of the module.

[DISPOSAL PRECAUTIONS]

⚠ CAUTION
● When disposing of the product, treat it as an industrial waste. When disposing of batteries, separate them from other wastes according to the local regulations. (For details of the battery directive in EU member states, refer to Appendix 7.)

[TRANSPORTATION PRECAUTIONS]

⚠ CAUTION
● When transporting lithium batteries, make sure to treat them based on the transportation regulations. (Refer to Appendix 6 for details of the relevant models.)

Revision

*The manual number is given on the bottom left of the back cover.

Print Date	*Manual Number	Revision
Jun., 1997	IB(NA)-66789-A	First edition
Jun., 2002	IB(NA)-66789-B	Equivalent to the Japanese version C Correction SAFETY PRECAUTIONS, Chapter 1, Section 1.2, Section 2.1, 2.2.1, 2.2.2, 2.2.3, 2.3, Chapter 3, Section 4.1.4, 4.2.2, 4.2.5, Section 5.1, 5.2, Section 6.1.2, 6.1.3, Section 7.1.1, 7.1.5, Section 8.1, Chapter 9, Section 10.3.2, Appendix 2.1, 2.2, Appendix 4.2
Dec., 2003	IB(NA)-66789-C	Addition model A1SY42P Correction SAFETY PRECAUTIONS, Section 1.1, Section 2.2.1, 2.3, Section 7.2.1, Section 8.4.1, 8.8, Section 9.1.3, 9.1.4, Section 11.3.2 Addition Appendix 7, 7.1, 7.2
Oct., 2006	IB(NA)-66789-D	Correction SAFETY PRECAUTIONS, Section 1.2, Section 2.2.1, 2.3, Chapter 3, Section 4.1, 4.1.3, 4.1.5, 4.2.2, 4.3, 4.4, 4.5.1, Section 5.1, 5.2, Section 6.1.1, 6.1.3, 6.2, Section 7.2, Section 8.1, 8.4.1, 8.5, 8.6, 8.7.1, 8.7.2, 8.8, Chapter 9, 9.1.3, 9.2.4, 9.2.6, Chapter 10, Section 10.3, 10.3.1, 10.3.2, Section 11.2.1, 11.2.8, 11.3.2, 11.4.1, 11.4.2, Appendix 2.1, 2.2, Appendix 3, Appendix 4.3 Addition SAFETY PRECAUTIONS, Section 6.3, Section 11.2.9 Deletion Section 7.1.4
May, 2007	IB(NA)-66789-E	Correction Section 4.2.2, 4.5.1, 8.7.1, 8.7.2, 9.1.3, 9.2.7,10.3.1, 11.4.2 Addition Section 9.1.7
Jul., 2007	IB(NA)-66789-F	Correction Section 6.2, Appendix 5.4.1, Appendix 5.4.3, Appendix 5.4.4, Appendix 5.4.5, Appendix 5.4.8, Appendix 5.4.9, Appendix 5.4.10
Oct, 2008	IB(NA)-66789-G	Correction SAFETY PRECAUTIONS, Chapter 3, Section 7.2.1 Addition Appendix 7, 7.1, 7.2

Japanese Manual Version SH-3631-J

This manual confers no industrial property rights or any rights of any other kind, nor dose it confer any patent licenses. Mitsubishi Electric Corporation cannot be held responsible for any problems involving industrial property rights which may occur as a result of using the contents noted in this manual.

©1997 MITSUBISHI ELECTRIC CORPORATION

Introduction

Thank you for purchasing the Mitsubishi programmable logic controller MELSEC-A Series.
Prior to use, please read this manual thoroughly to fully understand the functions.
Please hand in a copy of this manual to the end user.

Table of Contents

1	OVERVIEW	1 - 1 to 1 - 2

1.1 Features ..... 1 - 2
1.2 A2USHCPU-S1, A2USCPU(S1), A2ASCPU(S1/S30) Performance/Specification Comparisons ..... 1 - 4

2	SYSTEM CONFIGURATION	2 - 1 to 2 - 29

2.1 Overall Configuration ..... 2 - 1
2.2 Precautions When Configuring the System ..... 2 - 3
2.2.1 Hardware ..... 2 - 3
2.2.2 Software package ..... 2 - 7
2.2.3 Precautions when using GPP function software packages and A8PUE peripheral devices which are not compatible with AnU, A2AS ..... 2 - 10
2.3 System Equipment ..... 2 - 12
2.4 System Configuration Overview ..... 2 - 27

3	SPECIFICATIONS	3 - 1 to 3 - 1

4	CPU MODULE	4 - 1 to 4 - 48

4.1 Performance Specifications ..... 4 - 1
4.1.1 Overview of operation processing ..... 4 - 7
4.1.2 Operation processing of RUN, STOP, PAUSE, and STEP-RUN ..... 4 - 10
4.1.3 Operation processing upon instantaneous power failure ..... 4 - 12
4.1.4 Self-diagnostics functions ..... 4 - 13
4.1.5 Device list ..... 4 - 17
4.2 Parameter Setting Ranges ..... 4 - 19
4.2.1 List of parameter setting range ..... 4 - 19
4.2.2 Memory capacity setting (for main program, file register, comment, etc.) ..... 4 - 22
4.2.3 Setting ranges of timer and counter ..... 4 - 33
4.2.4 I/O devices ..... 4 - 35
4.2.5 I/O assignment of special function modules ..... 4 - 36
4.2.6 MELSECNET/MINI-S3 auto refresh processing ..... 4 - 37
4.3 Function List ..... 4 - 42
4.4 Handling Precautions ..... 4 - 44
4.5 Part Names ..... 4 - 45
4.5.1 Parts names of the A2USHCPU-S1, A2USCPU, A2USCPU-S1, A2ASCPU, A2ASCPU-S1, A2ASCPU-S30 ..... 4 - 45
4.5.2 Settings for memory protect switch ..... 4 - 47
4.5.3 Latch clear operation ..... 4 - 48

5 POWER SUPPLY MODULE 5 - 1 to 5 - 5

5.1 Specifications .....5 - 1
5.1.1 Power supply module selection.....5 - 3
5.2 Part Names .....5 - 4

6 BASE UNIT AND EXTENSION CABLE 6 - 1 to 6 - 10

6.1 Specifications .....6 - 1
6.1.1 Base unit specifications.....6 - 1
6.1.2 Extension cable specifications .....6 - 2
6.1.3 Applicable standards of extension base units (A1S52B(S1), A1S55B(S1), A1S58B(S1), A52B, A55B, A58B) .....6 - 3
6.2 Part Names .....6 - 7
6.3 Installation and Removal of DIN Rail.....6 - 9

7 MEMORY CASSETTE AND BATTERY 7 - 1 to 7 - 7

7.1 Memory Cassette .....7 - 1
7.1.1 Specifications.....7 - 1
7.1.2 Handling precautions .....7 - 2
7.1.3 Installation and removal of memory cassette.....7 - 3
7.1.4 Memory protection setting of A2SNMCA-30KE .....7 - 5
7.2 Battery .....7 - 6
7.2.1 Specifications.....7 - 6
7.2.2 Handling precautions .....7 - 6
7.2.3 Battery installation.....7 - 7

8 LOADING AND INSTALLATION 8 - 1 to 8 - 22

8.1 Fail-Safe Circuit Concept .....8 - 1
8.2 Installation Environment.....8 - 6
8.3 Calculation Method of Heat Amount Generated by the PLC.....8 - 7
8.4 Installing the Base Units.....8 - 9
8.4.1 Precautions when installing PLC.....8 - 9
8.4.2 Installation .....8 - 10
8.5 Installation and Removal of the Base Units.....8 - 11
8.6 Installation and Removal of the Dustproof Cover.....8 - 14
8.7 Wiring .....8 - 16
8.7.1 Wiring instructions.....8 - 16
8.7.2 Wiring to module terminals.....8 - 21
8.8 Precautions when Connecting the Uninterruptible Power Supply (UPS) .....8 - 22

9 EMC AND LOW VOLTAGE DIRECTIVES 9 - 1 to 9 - 13

9.1 Requirements for Compliance with EMC Directives.....9 - 1
9.1.1 EMC standards .....9 - 1
9.1.2 Installation instructions for EMC directive .....9 - 2
9.1.3 Cables .....9 - 3
9.1.4 Power supply module.....9 - 8

9.1.5 Ferrite core ..... 9 - 8
9.1.6 Noise filter (power supply line filter) ..... 9 - 9
9.1.7 Power line for external power supply terminal ..... 9 - 9
9.2 Requirements for Compliance with Low Voltage Directives ..... 9 - 10
9.2.1 Standard applied for MELSEC-AnS series PLC ..... 9 - 10
9.2.2 Precautions when using the MELSEC-AnS series PLC ..... 9 - 10
9.2.3 Power supply ..... 9 - 11
9.2.4 Control panel ..... 9 - 12
9.2.5 Module installation ..... 9 - 13
9.2.6 Grounding ..... 9 - 13
9.2.7 External wiring ..... 9 - 13

10 MAINTENANCE AND INSPECTION 10 - 1 to 10 - 6

10.1 Daily Inspection ..... 10 - 2
10.2 Periodic Inspection ..... 10 - 3
10.3 Battery Replacement ..... 10 - 4
10.3.1 Battery life ..... 10 - 4
10.3.2 Battery replacement procedure ..... 10 - 6

11 TROUBLESHOOTING 11 - 1 to 11 - 28

11.1 Fundamentals of Troubleshooting ..... 11 - 1
11.2 Troubleshooting ..... 11 - 2
11.2.1 Troubleshooting procedure ..... 11 - 2
11.2.2 Flow for actions when the "POWER" LED is turned OFF ..... 11 - 3
11.2.3 Flow for actions when the "RUN" LED is turned OFF ..... 11 - 4
11.2.4 Flow for actions when the "RUN" LED is flickering ..... 11 - 5
11.2.5 Flow for actions when the "ERROR" LED is turned ON ..... 11 - 6
11.2.6 Flow for actions when the "ERROR" LED is flickering ..... 11 - 7
11.2.7 Flow for actions when the output module's output load does not turn ON ..... 11 - 8
11.2.8 Flow for actions when the program cannot be written ..... 11 - 9
11.2.9 Flow for actions when the CPU module is not started up ..... 11 - 10
11.3 Error Code List ..... 11 - 11
11.3.1 Procedure to read an error code ..... 11 - 11
11.3.2 Error code list for the AnUCPU, A2US(H)CPU, A2ASCPU and A2USH board ..... 11 - 12
11.4 Fault Examples with I/O Modules ..... 11 - 23
11.4.1 Faults with the input circuit and the corrective actions ..... 11 - 23
11.4.2 Faults in the output circuit ..... 11 - 25

APPENDIX Appendix - 1 to Appendix - 71

Appendix 1 Instruction List ..... App - 1
Appendix 1.1 Precautions for write during RUN of a dedicated instruction ..... App - 14
Appendix 2 LISTS OF SPECIAL RELAYS AND SPECIAL REGISTERS ..... App - 15
Appendix 2.1 List of Special Relays ..... App - 15
Appendix 2.2 Special Registers ..... App - 27
Appendix 3 Peripheral Device ..... App - 46

Appendix 4 Precautions for Utilizing the Existing Sequence Programs for A2USHCPU-S1, A2USCPU(S1), or A2ASCPU(S1/S30) ..... App - 51
Appendix 4.1 Instructions with different specifications ..... App - 52
Appendix 4.2 Special relays and special registers with different specifications ..... App - 53
Appendix 4.3 Parameter setting ..... App - 54
Appendix 4.4 I/O control method ..... App - 55
Appendix 4.5 Microcomputer program ..... App - 56
Appendix 4.6 Processing of the index register ..... App - 57
Appendix 5 External Dimensions ..... App - 58
Appendix 5.1 A2USHCPU-S1, A2USHCPU, A2USCPU, A2USCPU-S1, A2ASCPU, A2ASCPU-S1, A2ASCPU-S30 modules ..... App - 58
Appendix 5.2 A1S61PN, A1S62PN and A1S63P power supply modules ..... App - 59
Appendix 5.3 Main base unit ..... App - 60
Appendix 5.3.1 A1S32B main base unit ..... App - 60
Appendix 5.3.2 A1S33B main base unit ..... App - 60
Appendix 5.3.3 A1S35B main base unit ..... App - 61
Appendix 5.3.4 A1S38B main base unit ..... App - 61
Appendix 5.4 Extension base unit ..... App - 62
Appendix 5.4.1 A1S65B extension base unit ..... App - 62
Appendix 5.4.2 A1S68B extension base unit ..... App - 62
Appendix 5.4.3 A1S52B extension base unit ..... App - 63
Appendix 5.4.4 A1S55B extension base unit ..... App - 63
Appendix 5.4.5 A1S58B extension base unit ..... App - 64
Appendix 5.4.6 A1S65B-S1 extension base unit ..... App - 64
Appendix 5.4.7 A1S68B-S1 extension base unit ..... App - 65
Appendix 5.4.8 A1S52B-S1 extension base unit ..... App - 65
Appendix 5.4.9 A1S55B-S1 extension base unit ..... App - 66
Appendix 5.4.10 A1S58B-S1 extension base unit ..... App - 66
Appendix 5.5 Memory cassette ..... App - 67
Appendix 5.5.1 A2SNMCA-30KE memory cassette ..... App - 67
Appendix 6 Transportation Precautions ..... App - 68
Appendix 6.1 Relevant models ..... App - 68
Appendix 6.2 Transportation Guidelines ..... App - 69
Appendix 7 Handling of Batteries and Devices with Built-in Batteries in EU Member States ..... App - 70
Appendix 7.1 Disposal precautions ..... App - 70
Appendix 7.2 Exportation precautions ..... App - 71

About This Manuals

The following manuals are related to this product.

Related Manuals

Manual Name	Manual No. (Model Code)
ACPU/QCPU-A (A mode) Programming Manual (Fundamentals) Describes programming methods necessary for creating programs, device names, parameters, program types, memory area configuration, and so on. (Sold separately)	IB-66249 (13J740)
ACPU/QCPU-A (A mode) Programming Manual (Common Instructions) Describes how to use the sequence instruction, basic instructions, applied instructions and microcomputer programs. (Sold separately)	IB-66250 (13J741)
AnSHCPU/AnACPU/AnUCPU/QCPU-A (A mode) Programming Manual (Dedicated Instructions) Describes instructions that have been expanded. (Sold separately)	IB-66251 (13J742)
AnACPU/AnUCPU Programming Manual (AD57 Instructions) Describes dedicated instructions to control the AD57(S1)/AD58 controller module. (Sold separately)	IB-66257 (13J743)
AnACPU/AnUCPU/QCPU-A (A mode) Programming Manual (PID Instructions) Describes dedicated instructions to perform the PID control. (Sold separately)	IB-66258 (13J744)
AnS Module type I/O User's Manual Describes the specification of the compact building block type I/O module. (Sold separately)	IB-66541 (13JE81)

USER PRECAUTIONS

Precautions when using the AnS series

For a new CPU module, which has never used before, the contents of built-in RAM and device data are undefined.
Make sure to clear the built-in RAM memory (PC memory all clear) in the CPU module by peripheral devices and operate latch clear by RUN/STOP key switches.

Precautions for battery

(1) The operation after a battery is unmounted and the PLC is stored.
When reoperating after a battery is uncounted and the PLC is stored, the contents of built-in RAM and device data may be undefined.
For this reason, make sure to clear the built-in RAM memory (PLC memory all clear) in the CPU module by peripheral devices and operate latch clear by RUN/STOP key switch before start the operation again.*
After the built-in RAM clear and latch clear of the CPU module, write the backed-up memory contents to the CPU module before saving.

(2) If a battery exceeded its guaranteed life is stored and reoperated.
If a battery exceeded its guaranteed life is stored and reoperated, the contents of built-in RAM and device data may be undefined.
For this reason, make sure to clear the built-in RAM memory (PLC memory all clear) in the CPU module by peripheral devices and operate latch clear by RUN/STOP key switch before start the operation again.*
After the built-in RAM clear and latch clear of the CPU module, write the backed-up memory contents to the CPU module before saving.

POINT
Make sure to back up each memory contents before storing the PLC.

* Refer to the following manuals for details of built-in RAM clear (PLC memory all clear) by peripheral devices.

- GX Developer Operating Manual
- A6GPP/A6PHP Operating Manual
- SW□IVD-GPPA Operating Manual

Refer to Section 4.5 for latch clear operation by RUN/STOP key switch of the CPU module.

Memo

1 OVERVIEW

This User's Manual describes the performance, functions, and handling methods of the A2USHCPU-S1 general-purpose PLC (abbreviated as A2USHCPU-S1 hereafter), A2USCPU/A2USCPU-S1 general-purpose PLC (abbreviated as A2USCPU(S1)) and A2ASCPU/A2ASCPU-S1/A2ASCPU-S30 general-purpose PLC (abbreviated as A2ASCPU(S1/S30)) as well as the specifications and handling of the memory cassette, power supply and the base unit.

The programming units and software packages have to be compatible with the upgraded A2UCPU, A2UCPU-S1, A3UCPU, and A4UCPU (abbreviated as AnUCPU hereafter). When the conventional programming units and software packages are used, the usable range varies depending on the model of the CPU (PLC model name). Refer to Section 2.2.3.

Related to each module used in the CPU modules, check the list of equipment in Section 2.3.
Refer to Section 2.2.1 for the special function modules which have limited usable device range.

1.1 Features

The A2USHCPU-S1/A2USCPU(S1)/A2ASCPU(S1/S30) has the following features.

(1) Increment of the program capacity
- A2USHCPU-S1/A2ASCPU-S30 : 30k steps
- A2USCPU(S1)/A2ASCPU/A2ASCPU-S1 : 14k steps

(2) Improvement of the operation speed (sequence instructions)
- A2USHCPU-S1 : 0.09μs/steps
- A2USCPU(S1)/A2ASCPU(S1/S30) : 0.2μs/steps

(3) Bytes of built-in RAM memory
- A2USHCPU-S1/A2USCPU-S1/A2ASCPU-S1/A2ASCPU-S30 : 256k bytes
- A2USCPU/A2ASCPU : 64k bytes

(4) Compatible with the fast and large-capacity networking for MELSECNET/10
The MELSECNET/10 network system can be constructed by installing a network module (A1SJ71LP21, 1SJ71LP21GE, 1SJ71LR21, 1SJ71BR11) in order to extend the base modules and set the network parameters.
It is also compatible with the MELSECNET II system.

(5) Has more points for the I/O devices, link devices, and data registers than those of the A1SCPU.

(a) A2USHCPU-S1, A2USCPU(S1)
- I/O device (X/Y) 8192 points (X/Y0 to X/Y1FFF)
- Link relay (B) 8192 points (B0 to B1FFF)
- Link register (W) 8192 points (W0 to W1FFF)
- Data register (D) 8192 points (D0 to D8191)

(b) A2ASCPU(S1/S30)
- I/O device (X/Y) 8192 points (X/Y0 to X/Y1FFF)
- Link relay (B) 4096 points (B0 to BFFF)
- Link register (W) 4096 points (W0 to WFFF)
- Data register (D) 6144 points (D0 to D6143)

(6) Can execute a data communication request batch processing.
- All of the data communication requests from the AJ71UC24, A1SJ71UC24-R2, A1SJ71UC24-R4, A1SJ71UC24-PRF, A1SD51S, AD51H-S3, peripheral devices, and others, can be processed by single END processing. (Normally, one END processing responds to one communication request.)
- The data communication request batch processing can be activated by selecting "YES" on the "END Batch Processing Setup" in the supplementary function setup of the parameter. Also, by turning ON the M9029 from the sequence program.
- Delay of the data transfer to each modules will be prevented by using the data communication request batch processing. (M9029: When OFF, only one request is processed by one scan.)

(7) Can execute the dedicated instructions for the AnA/AnUCPU.
Dedicated instructions for AnA/AnUCPU, AD57 instructions, and PID control instructions can be executed.

1.2 A2USHCPU-S1, A2USCPU(S1), A2ASCPU(S1/S30) Performance/Specification Comparisons

The differences in the performance and specifications between A2USHCPU-S1, A2USCPU(S1) and A2ASCPU(S1/S30) are as follows.
A2USHCPU-S1, A2USCPU(S1) and A2ASCPU(S1/S30) performances/specifications are the same but the following items.

Item			A2USHCPU-S1	A2USCPU(S1)	A2ASCPU(S1/S30)
I/O control mode			Refresh mode	Refresh mode	Refresh mode
Processing speed (Sequence instruction)			0.09μs/step	0.2μs/step	0.2μs/step
Constant scan			10 to 190ms	10 to 190ms	10 to 190ms
Main program capacity			Max. 30k steps	Max. 14k steps	Max. 14k steps (Max. 30k steps)*2
Memory capacity and memory cassette model	Memory capacity (built-in RAM)		256k bytes	64k bytes (256k bytes)*1	64k bytes (256k bytes)*3
	E^2PROM type memory cassette		A2SNMCA-30KE	A2SNMCA-30KE	A2SNMCA-30KE
Number of I/O device points			8192 points	8192 points	8192 points
Number of I/O points			1024 points	512 points (1024 points)*1	512 points (1024 points)*3
Device points	Internal relay	[M, L, S]	8192 points	8192 points	8192 points
	Link relay	[B]	8192 points	8192 points	4096 points
	Link register	[W]	8192 points	8192 points	4096 points
	Data register	[D]	8192 points	8192 points	6144 points
	File register	[R]	8192 points	8192 points	8192 points
	Annunciator	[F]	2048 points	2048 points	2048 points
	Timer	[T]	2048 points	2048 points	2048 points
	Counter	[C]	1024 points	1024 points	1024 points
	Index register	[V, Z]	14 points	14 points	14 points
Comment			Max. 4032 points	Max. 4032 points	Max. 4032 points
Expanded comment			Max. 3968 points	Max. 3968 points	Max. 3968 points
Watchdog timer setting			200ms fixed	200ms fixed	200ms fixed
Data link			MELSECNET/10 MELSECNET(II) MELSECNET/B	MELSECNET/10 MELSECNET(II) MELSECNET/B	MELSECNET/10 MELSECNET(II) MELSECNET/B

*1 When using A2USCPU-S1.
*2 When using A2ASCPU-S30.
*3 When using A2ASCPU-S1 or A2ASCPU-S30.

2 SYSTEM CONFIGURATION

The possible system configuration with A2USHCPU-S1, A2USCPU(S1), A2ASCPU(S1/S30), and the precautions when the system is configured, and system conponents are described.

2.1 Overall Configuration

The system configurations of the A2USHCPU-S1, A2USCPU(S1), A2ASCPU(S1/S30) stand-alone systems and peripheral devices are shown as follows:

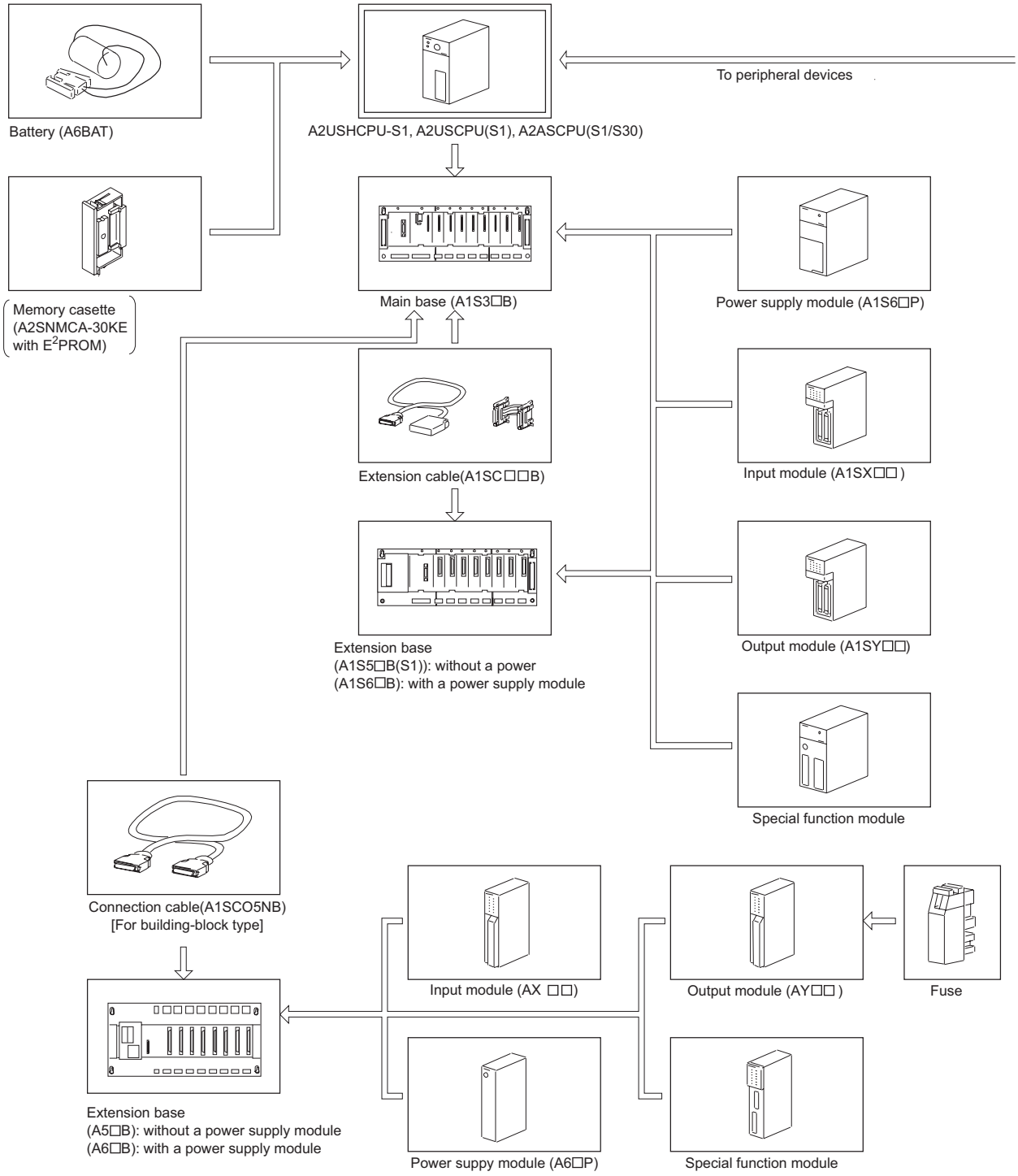

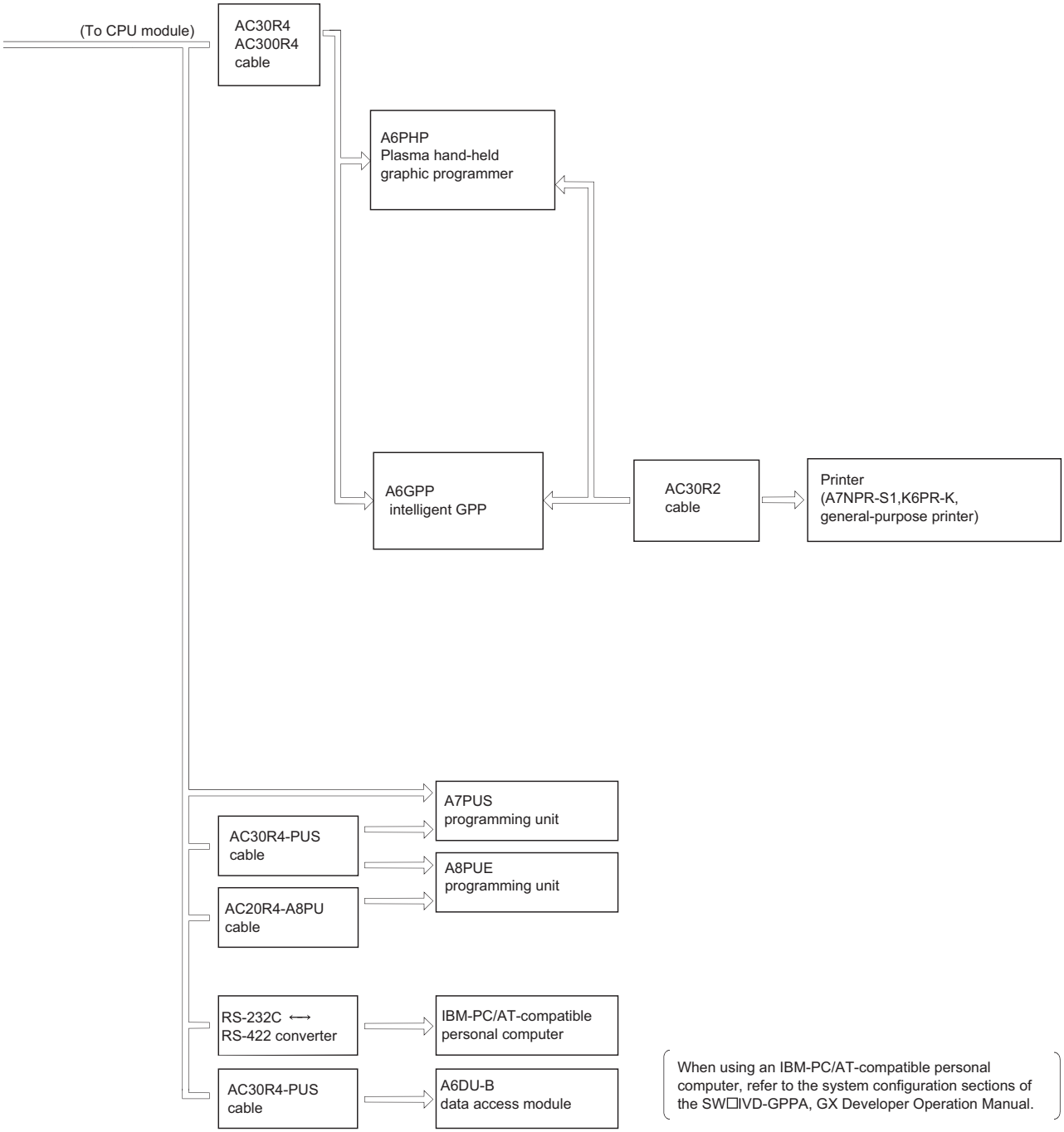

When using an IBM-PC/AT-compatible personal computer, refer to the system configuration sections of the SW□IVD-GPPA, GX Developer Operation Manual.

2.2 Precautions When Configuring the System

The hardware and software packages which can be used for the CPU module are described.

2.2.1 Hardware

(1) I/O module
All the building-block-type I/O modules for A□N and A□A can be used by installing them to the extension base unit of A5□B/A6□B.

(2) Special function module

(a) Special function modules for A□N and A□A can be used by installing them in the extension base of A5□B/A6□B.

(b) Installation count of the following modules are limited of the special function modules.

<table>
<tr><td colspan="2">Ad51H-S3 *1
AJ71UC24
AJ71E71N-B5*1
AJ71C23-S3
AJ61BT11 (Only when the intelligent mode is used.)</td><td>AJ71C22-S1
AJ71E71N-B2*1
AJ71E71N-T*1
AD22-S</td><td colspan="2" rowspan="3">Up to 6 modules in total can be installed.</td></tr>
<tr><td colspan="2">GOT-A900 Series
(Only when the bus connection is used.)*2
GOT1000 Series
(Only when the bus connection is used.)*2</td></tr>
<tr><td colspan="2">A1SJ71UC24-R2(PRF/R4)
A1SJ71E71N-B2*1
A1SJ71E71N-B5T*1
A1SD51S
A1SJ61BT11(Only when the intelligent mode is used.)</td><td>A1SD21-S1</td></tr>
<tr><td colspan="2">AI61(S1)</td><td colspan="2" rowspan="2">Only one module can be installed.</td></tr>
<tr><td colspan="2">A1SI61</td></tr>
<tr><td>AJ71AP21(S3)*1
AJ71AT21B*1</td><td>AJ71AR21*1</td><td rowspan="2">Up to 2 modules in total can be installed.</td><td rowspan="4">Up to 4 modules in total can be installed.</td></tr>
<tr><td>A1SJ71AP21(S3)*1
A1SJ71AT21B*1</td><td>A1SJ71AR21*1</td></tr>
<tr><td>AJ71LP21(G/GE)
AJ71LR21</td><td>AJ71BR11</td><td rowspan="2">Up to 4 modules in total can be installed.</td></tr>
<tr><td>A1SJ71LP21(GE)
A1SJ71LR21</td><td>A1SJ71BR11</td></tr>
<tr><td colspan="2">AJ71PT32-S3 (Only when the extension mode is used.)
AJ71T32-S3 (Only when the extension mode is used.)</td><td colspan="2" rowspan="2">Up to 10 modules in total can be installed.</td></tr>
<tr><td colspan="2">A1SJ71PT32-S3
(Only when the extension mode is used.)
A1SJ71PT32-S3
(Only when the extension mode is used.)</td></tr>
</table>

*1 Accessible within the device range of A3ACPU.
Refer to the user's manual of the corresponding special function module for the accessible device ranges.

*2 Refer to the following manual for the GOT model names.
- GOT-A900 Series User's Manual (GT Work2 Versions2/GT Designer2 Version2 Compatible Connection System Manual)
- GOT1000 Series Connection Manual

(c) When a remote I/O network is constructed with the MELSECNET/10 network system, use the A2USHCPU-S1 software of version "A" or later, and the AJ71LP21/LR21/BR11, A1SJ71LP21/BR11-type network software of version "J" or later.

<Example> For AJ71LP21/BR11:

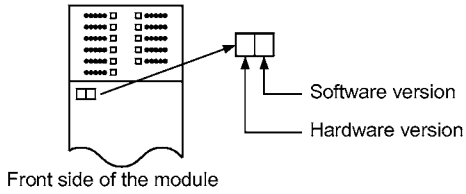

(d) When a remote I/O network is constructed with the MELSECNET/10 network system, use the A2USCPU(S1), A2ASCPU, A2ASCPU-S1 software of version "D" or later, the A2ASCPU-S30 software of version "L" or later, and the AJ71LP21/LR21/BR11, A1SJ71LP21/BR11-type network software of version "J" or later.

<Example> For AJ71LP21/BR11:

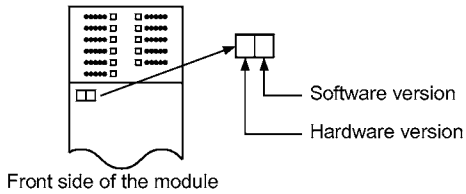

REMARK

The special function modules which cannot be used by the A2USHCPU-S1 are as follows:

- AJ71C23 (modules dated before February 1987)
- AJ71C24 (modules dated before February 1987)
- AD57-S2
- AD51 (modules dated before March 1987)

Confirm the manufactured date on the rating plate.

(3) Peripheral Device

Among the programming units (A7PUS, A8PUE), only A7PUS is installed as an add-on system.

Other models (A8PUE) use only the hand-held system with a cable.

(4) Writing while running when operated by the E^2PROM (When the A2SNMCA-30KE is installed.)

When "write while running " to the E^2PROM is executed, the program transfer in progress status is displayed on the peripheral device, then the processing for the sequence program is stopped for approximately two seconds until the transfer finishes to complete the "write while running ".
Because the program processing stops for two seconds, stop the CPU while writing instead of executing the "write while running " when it affects the operation of the controlled devices.
When "A3A" or "A3H" is specified as the PLC's model to startup the GPP function software package which is not AnU-compatible, the "write while running" cannot be executed to the E^2PROM.

When "write while running" to the E^2PROM is executed, the changed circuit block and any PLF instructions included in the steps after the instructions will not operate normally.
When the execution condition for the PLF instruction is turned off upon completion of writing, the PLF instruction is executed.

(5) Writing while in operation by the E^2PROM (When the A2SNMCA-30KE is installed.)

(a) When writing a program to the E^2PROM after the GPP function software package is started up with the PLC's model specified as "A3A" or "A3H", cancel the memory protection of both the CPU main module and the memory cassette for the E^2PROM (A2SNMCA-30KE) before execution.

(b) The writing of the program cannot be executed from the computer link module or from a peripheral device connected to other stations on the MELSECNET.
Write the program from a peripheral device connected to the RS-422 of the CPU module.

2.2.2 Software package

(1) GPP function software packages and model name setting at the start-up
The table below shows the GPP function software packages allowing you to create the A2USCPU program and PLC model settings at start-up.
When creating a CPU module program, set the PLC type "A2USH-S1", "A2US (S1)", "A2AS(S1)" or "A2AS-S30" according to the CPU usage modules.
When "A2USH-S1", "A2AS-S30" is not in the PLC type, set "A3U". When "A2US (S1)", "A2AS(S1)" is not, set "A2U".
When "A3U" is not, set "A3A". When "A2U" is not, set "A2A".
When "A3U", "A3A", "A2U" or "A2A" are not, set "A3H".

Peripheral Device	Software package for system start-up	PLC CPU model setting				Remark
		A2USH-S1	A2US(S1)	A2AS-S30	A2AS(S1)	
PC/AT personal computer	SW□IVD-GPPA (□ is 1 to 3.)	A3U	A2U	A3A	A2A	
	SW□IVD-GPPA (□ is 4 or later.)	A2USH-S1	A2US	A2AS-S30	A2AS(S1)	
	GX Developer					
A6PHP	SW3GP-GPPA	A3H	A3H	A3H	A3H	Writing on the ROM is not allowed.
	SW4GP-GPPA	A3A	A2A	A3A	A2A	
	SW□GP-GPPAU	A3U	A2U	A3A	A2A	
A6GPP	SW3GP-GPPA SW3GP-GPPA	A3H	A3H	A3H	A3H	Writing on the ROM is not allowed.
	SW4GP-GPPA	A3A	A2A	A3A	A2A	
	SW□GP-GPPAU	A3U	A2U	A3A	A2A	

NOTE

For A2USHCPU-S1, A2ASCPU-S30 use caution on the followings.

(a) Since the PLC's model name for the GPP function software package (SW□IVD-GPPA; □ is older than 3 is set to "A3U", pay attention to the followings:

1) When the LED or LEDC instruction is written, it is not usable but no error will be issued.
2) When the CHG instruction is written, it is not usable, and the error code 13 and detailed error code 134 will be detected.
3) When the subprogram is set, it is not usable, and the error code 11 and detailed error code 111 will be detected.

(b) When the MELSECNET(II), MELSECNET/10 parameters are used up to the maximum of 16k bytes, program capacity will be limited to 22k steps.
The A2USHCPU-S1 uses the same memory area for the sequence program as that for the parameters of MELSECNET(II) and MELSECNET/10.
Therefore, the remainder which is subtracted the memory area used by the MELSECNET(II) and MELSECNET/10 parameters from the max. 30k steps can be used for the sequence program.

POINT

(1) Old software packages other than SW3-GPPA, SW3GP-GPPA, and SW4GP-GPPA cannot be used as the software package for system start-up for A6GPP/A6PHP.
(2) When the MELSECNET/10 network system is configured with the A2USHCPU-S1 or A2ASCPU-S30, use the AnU/A2USH-S1/A2AS-S30 compatible GPP function software package (which contains "A3U" / "A2USH-S1" in the PLC's model name).
The network function cannot be set with GPP function software packages not compatible with AnU, A2USH-S1 or A2AS-S30 (no "A3U", "A2USH-S1" or "A2AS-S30" in the PLC's model name).

(2) Utility package
None of the following utility packages for A6GPP/A6PHP can be used:

- SW□-AD57P
- SW□-UTLP-FN0
- SW□-UTLP-FN1
- SW□-UTLP-PID
- SW□-SIMA
- SW□-UTLP-FD1
- SW□-SAPA

* The packages marked with * can execute the same functions using the dedicated instructions.
For details, refer to type AnSHCPU/AnACPU/AnUCPU/QCPU-A (A Mode) Programming Manual (Dedicated Instructions).

REMARK

The characters generators and canvas, which are necessary for AD57(S1), are created on the peripheral device using the SW□-AD57P.

POINT

(1) Utility packages which access the A2USHCPU-S1 or A2ASCPU-S30 can specify only in the device range for A3ACPU or A3HCPU equivalent.
(Refer to Section 2.2.3)
Packages which access the A2USCPU(S1), A2ASCPU or A2ASCPU-S1 can specify only in the device range for A2ACPU or A3HCPU equivalent.
(Refer to Section 2.2.3)
(2) Use an AnU-compatible utility package to use the device range for the A2USHCPU-S1, A2USCPU(S1) or A2ASCPU(S1/S30).
(Example: SW1IVD-SAP2, etc.)

2.2.3 Precautions when using GPP function software packages and A8PUE peripheral devices which are not compatible with AnU, A2AS

When starting with GPP function software packages not compatible with the AnU, A2USH-S1, A2US, A2AS(S1), A2AS-S30 (starting with the PLC model name "A3A ", "A2A" or "A3H") or a A8PUE peripheral device (containing A7PUS), the usable device ranges are limited as follows.

(1) Usable device range
(a) For the A2USHCPU-S1, A2ASCPU-S30

Item	AnACPU-compatible module		A3HCPU-compatible module	
	Modules whose PLC model for system FD start-up is "A3A"	A8PUE	Modules whose PLC model for system FD start-up is "A3H"	A7PUS
Instruction (sequence/basic/ application/dedicated)	All instructions can be used.			
Program capacity	A maximum of 30k steps can be used for the main program.			
Number of I/O device points (X/Y)	X/Y0 to X/Y7FF can be used. (X/Y800 to X/Y1FFF cannot be used.)		X/Y0 to X/Y7FF can be used. (X/Y800 to X/Y1FFF cannot be used.)	
M, L, S relay	M/L/S0 to M/L/S8191 can be used.		M/L/S0 to M/L/S2047 can be used. (M/L/S2048 to M/L/S8191 cannot be used.)	
Link relay (B)	B0 to BFFF can be used. (B1000 to B1FFF cannot be used.)		B0 to B3FF can be used. (B400 to B1FFF cannot be used.)	
Timer (T)	T0 to T2047 can be used.		T0 to T255 can be used. (T256 to T2047 cannot be used.)	
Counter (C)	C0 to C1023 can be used.		C0 to C255 can be used. (C256 to C1023 cannot be used.)	
Data register (D)	D0 to D6143 can be used. (D6144 to D8191 cannot be used.)		D0 to D1023 can be used. (D1024 to D8191 cannot be used.)	
Link register (W)	W0 to WFFF can be used. (W1000 to W1FFF cannot be used.)		W0 to W3FF can be used. (W400 to W1FFF cannot be used.)	
Annunciator (F)	F0 to F2047 can be used.		F0 to F255 can be used. (F256 to F2047 cannot be used.)	
Index register (V, Z)	V, V1 to V6, Z, Z1 to Z6 can be used.		V and Z can be used. (V1 to V6, Z1 to Z6 cannot be used.)	
Expanded comment	Max. 3968 points	–	Unusable (Used on the system)	–
Latch (power failure compensation) range	The device range shown above can be latched.		The device range shown above can be latched.	
I/O assignment	Possible to register occupied I/O points and module model names.	–	Number of I/O occupied points can be registered.	–

(1) The device range other than listed above is the same as that of A2USHCPU-S1, A2ASCPU-S30.

(2) Refer to the operation manual of each peripheral device for available functions.

(b) For the A2USCPU(S1), A2ASCPU, A2ASCPU-S1

Item	AnACPU-compatible module		A3HCPU-compatible module	
	Modules whose PLC model for system FD start-up is "A2A"	A8PUE	Modules whose PLC model for system FD start-up is "A3H"	A7PUS
Instruction (sequence/basic/ application/dedicated)	All instructions can be used.			
Program capacity	A maximum of 30k steps can be used for the main program.			
Number of I/O device points (X/Y)	X/Y0 to X/Y3FF can be used. (X/Y400 to X/Y1FFF cannot be used.)		X/Y0 to X/Y7FF can be used. (X/Y800 to X/Y1FFF cannot be used.)	
M, L, S relay	M/L/S0 to M/L/S8191 can be used.		M/L/S0 to M/L/S2047 can be used. (M/L/S2048 to M/L/S8191 cannot be used.)	
Link relay (B)	B0 to BFFF can be used. (B1000 to B1FFF cannot be used.)		B0 to B3FF can be used. (B400 to B1FFF cannot be used.)	
Timer (T)	T0 to T2047 can be used.		T0 to T255 can be used. (T256 to T2047 cannot be used.)	
Counter (C)	C0 to C1023 can be used.		C0 to C255 can be used. (C256 to C1023 cannot be used.)	
Data register (D)	D0 to D6143 can be used. (D6144 to D8191 cannot be used.)		D0 to D1023 can be used. (D1024 to D8191 cannot be used.)	
Link register (W)	W0 to WFFF can be used. (W1000 to W1FFF cannot be used.)		W0 to W3FF can be used. (W400 to W1FFF cannot be used.)	
Annunciator (F)	F0 to F2047 can be used.		F0 to F255 can be used. (F256 to F2047 cannot be used.)	
Index register (V, Z)	V, V1 to V6, Z, Z1 to Z6 can be used.		V and Z can be used. (V1 to V6, Z1 to Z6 cannot be used.)	
Expanded comment	Max. 3968 points	–	Unusable (Used on the system)	–
Latch (power failure compensation) range	The device range shown above can be latched.		The device range shown above can be latched.	
I/O assignment	Possible to register occupied I/O points and module model names.	–	Number of I/O occupied points can be registered.	–

(1) The device range other than listed above is the same as that of A2USCPU(S1), A2ASCPU, A2ASCPU-S1.

(2) Refer to the operation manual of each peripheral device for available functions.

2.3 System Equipment

Various components of each module and peripheral devices which can be used by the A2USHCPU-S1, A2USCPU(S1), A2ASCPU(S1/S30) are listed.

(1) Modules dedicated to AnS

Product Name	Model Name	Description		Number of occupied points (points) [I/O allocation module type]	Current Consumption		Remark
					5VDC(A)	24VDC(A)	
CPU module	A2USHCPU-S1	Actual number of I/O points 1024, memory capacity 256k bytes		–	0.32	–	Built-in RAM memory
	A2USCPU	Actual number of I/O points 512, memory capacity 64k bytes		–	0.32	–	
	A2USCPU-S1	Actual number of I/O points 1024, memory capacity 256k bytes		–	0.32	–	
	A2ASCPU	Actual number of I/O points 512, memory capacity 64k bytes		–	0.32	–	
	A2ASCPU-S1	Actual number of I/O points 1024, memory capacity 256k bytes		–	0.32	–	
	A2ASCPU-S30	Actual number of I/O points 1024, memory capacity 256k bytes		–	0.32	–	
Power supply module	A1S61PN	5VDC, 5A	100/200VAC input	–	–	–	Installed in the power supply slot of the main base and extension base.
	A1S62PN	5VDC, A/24VDC, 0.6A					
	A1S63P	5VDC, 5A	24VDC input				

Product Name	Model Name	Description	Number of occupied points (points) [I/O allocation module type]	Current Consumption		Remark
				5VDC(A)	24VDC(A)	
Input module	A1SX10	16-point 100 to 120VAC input module	16 [16 input points]	0.05	–	
	A1SX10EU	16-point 100 to 120VAC input module	16 [16 input points]	0.05	–	
	A1SX20	16-point 200 to 240VAC input module	16 [16 input points]	0.05	–	
	A1SX20EU	16-point 200 to 240VAC input module	16 [16 input points]	0.05	–	
	A1SX30	16-point 12/24VDC, 12/24VAC input module	16 [16 input points]	0.05	–	
	A1SX40	16-point 12/24VDC input module	16 [16 input points]	0.05	–	
	A1SX40-S1	16-point 24VDC input module	16 [16 input points]	0.05	–	
	A1SX40-S2	16-point 24VDC input module	16 [16 input points]	0.05	–	
	A1SX41	32-point 12/24VDC input module	32 [32 input points]	0.08	–	
	A1SX41-S1	32-point 24VDC input module	32 [32 input points]	0.12	–	
	A1SX41-S2	32-point 24VDC input module	32 [32 input points]	0.08	–	
	A1SX42	64-point 12/24VDC input module	64 [64 input points]	0.09	–	
	A1SX42-S1	64-point 24VDC input module	64 [64 input points]	0.16	–	
	A1SX42-S2	64-point 24VDC input module	64 [64 input points]	0.09	–	
	A1SX71	32-point 5/12/24VDC input module	32 [32 input points]	0.075	–	
	A1SX80	16-point 12/24VDC sink/source input module	16 [16 input points]	0.05	–	
	A1SX80-S1	16-point 24VDC sink/source input module	16 [16 input points]	0.05	–	
	A1SX80-S2	16-point 24VDC sink/source input module	16 [16 input points]	0.05	–	
	A1SX81	32-point 12/24VDC sink/source input module	16 [16 input points]	0.08	–	
	A1SX81-S2	32-point 24VDC sink/source input module	32 [32 input points]	0.08	–	
	A1SX82-S1	64-point 24VDC sink/source input module	32 [32 input points]	0.16	–	

Product Name	Model Name	Description	Number of occupied points (points) [I/O allocation module type]	Current Consumption		Remark
				5VDC(A)	24VDC(A)	
Output module	A1SY10	16-point relay contact output module (2A)	16 [16 output points]	0.12	0.09	
	A1SY10EU	16-point relay contact output module (2A)	16 [16 output points]	0.12	0.10	
	A1SY14EU	12-point relay contact output module (2A)	16 [16 output points]	0.12	0.10	
	A1SY18A	8-point relay contact output module (2A) for independent contacts	16 [16 output points]	0.24	0.075	
	A1SY18AEU	8-point relay contact output module (2A) for independent contacts	16 [16 output points]	0.24	0.075	
	A1SY22	16-point triac output module (0.6A)	16 [16 output points]	0.27	(200VAC) 0.002	
	A1SY28A	8-point triac output module (1A) All points independent	16 [16 output points]	0.13	–	
	A1SY40	16-point 12/24VDC transistor output module (0.1A) sink type	16 [16 output points]	0.27	0.008	
	A1SY40P	16-point 12/24VDC transistor output module (0.1A) sink type	16 [16 output points]	0.08	0.011	
	A1SY41	32-point 12/24VDC transistor output module (0.1A) sink type	32 [32 output points]	0.50	0.008	
	A1SY41P	32-point 12/24VDC transistor output module (0.1A) sink type	32 [32 output points]	0.14	0.012	
	A1SY42	64-point 12/24VDC transistor output module (0.1A) sink type	64 [64 output points]	0.93	0.008	
	A1SY50	16-point 12/24VDC transistor output module (0.5A) sink type	16 [16 output points]	0.12	0.06	
	A1SY60	16-point 24VDC transistor output module (2A) sink type	16 [16 output points]	0.12	0.015	
	A1SY60E	16-point 12/24VDC transistor output module (2A) source type	16 [16 output points]	0.20	0.01	
	A1SY68A	8-point 5/12/24/48VDC transistor output module (2A) sink/source type All points independent	16 [16 output points]	0.11	–	
	A1SY71	32-point 5/12VDC transistor output module (0.016A) sink type	32 [32 output points]	0.40	0.15	
	A1SY80	16-point 12/24VDC transistor output module (0.8A) source type	16 [16 output points]	0.12	0.02	
	A1SY81	32-point 12/24VDC transistor output module (0.1A) source type	32 [32 output points]	0.50	0.008	
	A1SY82	64-point 12/24VDC transistor output module (0.1A) source type	64 [64 output points]	0.93	0.008	

Product Name	Model Name	Description	Number of occupied points (points) [I/O allocation module type]	Current Consumption		Remark
				5VDC(A)	24VDC(A)	
I/O hybrid module	A1SH42	32-point 12/24VDC input module 32-point 12/24VDC transistor output module (0.1A) sink type	32 [32 output points]	0.50	0.008	
	A1SH42-S1	32-point 24VDC input module 32-point 12/24VDC transistor output module (0.1A) sink type	32 [32 output points]	0.50	0.008	
	A1SX48Y18	8-point 24VDC input module 8-point relay contact output module (2A)	16 [16 output points]	0.085	0.045	
	A1SX48Y58	8-point 24VDC input module 8-point 12/24VDC transistor output module (0.5A)	16 [16 output points]	0.06	0.06	
Dynamic input module	A1S42X	16/32/48/64 points 12/24VDC dynamic input module	Specified number of points [Input Specified number of points]	0.08	–	
Dynamic output module	A1S42Y	16/32/48/64 points 12/24VDC dynamic output module	Specified number of points [Output Specified number of points]	0.18	0.055	

Product Name	Model Name	Description	Number of occupied points (points) [I/O allocation module type]	Current Consumption		Remark
				5VDC(A)	24VDC(A)	
Blank cover	A1SG60	Dust-proof cover for unused slot	16 [Empty]	–	–	
Dummy module	A1SG62	16-point, 32-point, 48-point, 64-point selectable module	Specified number of points [Input Specified number of points]	–	–	
Pulse catch module	A1SP60	Short ON-time pulse input module (pulse with a minimum of 0.5ms) 16 input points	16 [16 output points]	0.055	–	
Analog timer module	A1ST60	A module whose timer setting value can be changed for different volumes (0.1 to 1.0s,1 to 10s,10 to 60s,60 to 600s) Analog timer 8 points	16 [16 output points]	0.055	–	
Interrupt module	A1SI61	Interrupt module for specifying the interrupt program (16-point interrupt input)	32 [32 special points]	0.057	–	
High-speed counter module	A1SD61	32-bit signed binary 50kBPS, 1 channel	32 [32 special points]	0.35	–	
	A1SD62	24-bit signed binary, 2 channel 100kPPS, DC input transistor output (sink type)	32 [32 special points]	0.1	–	
	A1SD62D	24-bit signed binary, 2 channel 200kPPS, difference input transistor output (sink type)	32 [32 special points]	0.25	–	
	A1SD62D-S1	24-bit signed binary, 2 channel 200kPPS, difference input transistor output (sink type)	32 [32 special points]	0.27	–	
	A1SD62E	24-bit signed binary, 2 channel 100kPPS, DC input transistor output (source type)	32 [32 special points]	0.1	–	
A/D converter module	A1S64AD	4 to 20mA/0 to 10V 4 analog channels	32 [32 special points]	0.4	–	
	A1S68AD	4 to 20mA/0 to 10V 8 analog channels	32 [32 special points]	0.4	–	
D/A converter module	A1S62DA	4 to 20mA/0 to 10V 2 analog output channels	32 [32 special points]	0.8	–	
	A1S68DAV	-10 to 10V input 8 analog output channels	32 [32 special points]	0.65	–	
	A1S68DAI	4 to 20mA input 8 analog output channels	32 [32 special points]	0.85	–	
Analog I/O module	A1S63ADA	Analog input, 2 channels, simple loop control is allowed. 1 analog output channels	32 [32 special points]	0.8	–	
	A1S66ADA	Analog input, 4 channels, simple loop control is allowed. 2 analog output channels	64 [64 special points]	0.21	0.16	

Product Name	Model Name	Description	Number of occupied points (points) [I/O allocation module type]	Current Consumption		Remark
				5VDC(A)	24VDC(A)	
Temperature regulating module	A1S62RD3	For connecting to Pt100 (3-wire) Temperature input, 2 channels	32 [32 special points]	0.49	–	
	A1S62RD4	For connecting to Pt100 (4-wire) Temperature input, 2 channels	32 [32 special points]	0.39	–	
	A1S68TD	Thermocouple input, 8 channels	32 [32 special points]	0.32	–	
	A1S62TCTT-S2	Transistor output, thermocouple input 2 channels/modules PID control: ON/OFF pulse	32 [32 special points]	0.19	–	
	A1S62TCTTBW-S2	Transistor output, thermocouple input 2 channels/modules PID control: ON/OFF pulse, heater break detection function	32 [32 special points]	0.28	–	
	A1S62TCRT-S2	Transistor output, platinum temperature-mesuring resistor input 2 channels/modules PID control: ON/OFF pulse	32 [32 special points]	0.19	–	
	A1S62TCRTBW-S2	Transistor output, platinum temperature-mesuring resistor input 2 channels/modules PID control: ON/OFF pulse, heater break detection function	32 [32 special points]	0.28	–	
	A1S64TCTT-S1	Transistor output, thermocouple input 4 channels/modules PID control: ON/OFF pulse or 2 positioning control	32 [32 special points]	0.33	–	
	A1S64TCTTBW-S1	Transistor output, thermocouple input 4 channels/modules PID control: ON/OFF pulse or 2 positioning control Heater break detection function	32 [32 special points]	0.42	–	
	A1S64TCRT-S1	Transistor output, thermocouple input 4 channels/modules PID control: ON/OFF pulse or 2 positioning control	32 [32 special points]	0.33	–	
	A1S64TCRTBW-S1	Transistor output, thermocouple input 4 channels/modules PID control: ON/OFF pulse or 2 positioning control Heater break detection function	32 [32 special points]	0.42	–	
Computer link module	A1SJ71UC24-R2	Computer link function RS-232C, 1 channel	32 [32 special points]	0.1	–	
	A1SJ71UC24-PRF	Computer link function, printer function RS-232C, 1 channel	32 [32 special points]	0.1	–	
	A1SJ71UC24-R4	Computer link function, multidrop link function RS-422/RS-485, 1 channel	32 [32 special points]	0.1	–	

Product Name	Model Name	Description	Number of occupied points (points) [I/O allocation module type]	Current Consumption		Remark
				5VDC(A)	24VDC(A)	
Ethernet interface module	A1SJ71E71N3-T	10 Base-T	32 [32 special points]	0.69	–	Only AnACPU equivalent device range accessible
	A1SJ71E71N-T	10 Base-T	32 [32 special points]	0.56	–	
	A1SJ71E71N-B2	10 Base 2 (for Cheapernet)	32 [32 special points]	0.66	–	
	A1SJ71E71N-B5	10 Base 5 (for Ethernet)	32 [32 special points]	0.57	–	
Intelligent communication module	A1SD51S	BASIC (interpreter/compiler) RS-232C, 2 channel RS-422/RS485, 1 channel	32 [32 special points]	0.4	–	
Positioning module	A1SD70	1 axis positioning control, speed control and speed-positioning control, analog voltage output for speed-positioning control (0 to ± 10V)	48 First half 16 empty points Second half 32 special points	0.3	–	
	A1SD75P1-S3	For positioning control, pulse output, 1-axis	32 [32 special points]	0.7	–	
	A1SD75P2-S3	For positioning control, pulse output, 2-axis (independent, 2-axis simultaneous, linear interpolation, circular interpolation)	32 [32 special points]	0.7	–	
	A1SD75P3-S3	For positioning control, pulse output, 3-axis (independent, 3-axis simultaneous, 2-axis linear interpolation, 2-axis circular interpolation)	32 [32 special points]	0.7 *	–	* When different driver is connected: 0.78A
	A1SD75M1	For positioning control, digital output, for MR-H-B/MR-J-B/MR-J2-B, 1-axis SSCNET	32 [32 special points]	0.7	–	
	A1SD75M2	For positioning control, digital output, for MR-H-B/MR-J-B/MR-J2-B, 2-axis SSCNET (Independent, 2-axis simultaneous, linear interpolation, circular interpolation)	32 [32 special points]	0.7	–	
	A1SD75M3	For positioning control, digital output, for MR-H-B/MR-J-B/MR-J2-B, 1-axis SSCNET For MR-H-B/MR-J-B/MR-J2-B, 3-axis SSCNET (independent, 3-axis simultaneous, 2-axis linear interpolation, 2-axis circular interpolation)	32 [32 special points]	0.7	–	
ID interface module	A1SD35ID1	ID interface module One reader/writer modules can be connected.	32 [32 special points]	0.25	0.17	
	A1SD35ID2	ID interface module Two reader/writer modules can be connected.	32 [32 special points]	0.25	0.33	

Product Name	Model Name	Description	Number of occupied points (points) [I/O allocation module type]	Current Consumption		Remark
				5VDC(A)	24VDC(A)	
MELSECNET(II) data link module	A1SJ71AP21	For the master and local stations of MELSECNET(II) data link system (for the optical fiber cable)	32 [32 special points]	0.33	–	Access is allowed within the device range of the AnACPU.
	A1SJ71AP21-S3	For the master and local stations of MELSECNET(II) data link (for the GI-type optical fiber cable)	32 [32 special points]	0.33	–	
	A1SJ71AR21	For the master and local stations of MELSECNET(II) data link system (for the coaxial cable)	32 [32 special points]	0.8	–	
MELSECNET/B data link module	A1SJ71AT21B	For the master and local stations of MELSECNET/B data link system	32 [32 special points]	0.66	–	
	A1SJ72T25B	For the remote I/O station of MELSECNET/B data link system	–	0.3	–	
B/NET data link module	A1SJ71B62-S3	Master module for B/NET	32 [32 special points]	0.08	–	
MELSECNET/10 data link module	A1SJ71LP21	For the control, master, and normal stations of the MELSECNET/10 data link module system (For the dual loop SI-type optical fiber cable)	32 [32 special points]	0.65	–	
	A1SJ71LP21GE	For the control, master, and normal stations of the MELSECNET/10 data link module system (For the dual loop GI-type optical fiber cable)	32 [32 special points]	0.65	–	
	A1SJ71BR11	For the control, master, and normal stations of the MELSECNET/10 data link module system (For the single bus coaxial cable)	32 [32 special points]	0.80	–	
	A1SJ71LR21	For the control, master, and normal stations of the MELSECNET/10 data link module system (For the coaxial cable dual loop)	32 [32 special points]	1.14	–	
CC-Link system master module	A1SJ61BT11	For the master and local stations of the CC-Link data link system (For the twisted pair shield cable only)	32 [32 special points]	0.40	–	
MELSECNET/ MINI-S3 master module	A1SJ71PT32-S3	For MELSECNET/MINI-S3 master stations (max. 64 stations). Performs remote I/O and remote terminal control of a total of 512 I/O points.	I/O dedicated mode 32 [32 special points]	0.35	–	
			Expanded mode 48 [48 special points]			
MELSECNET-I/O LINK master module	A1SJ51T64	MELSECNET-I/O LINK master station. Controls I/O LINK remote I/O module of a maximum of 64 stations and a total of 128 I/O points. If only a few remote I/O units are used, perform I/O assignment with a peripheral device to decrease the number of occupied I/O points to 16, 32, or 48.	64 [64 output points]	0.115	0.09	
S-LINK interface module	A1SJ71SL92N	Master module for S-LINK I/O total 128 points	32 [32 special points]	0.20	–	
AS-I interface module	A1SJ71AS92	Master module for AS-I I/O total 496 points	32 [32 special points]	0.15	–	
Positioning detection module	A1S62LS	Absolute positioning detection module	32 [32 special points]	0.55	–	

Product Name	Model Name	Description	Number of occupied points (points) [I/O allocation module type]	Current Consumption		Remark
				5VDC(A)	24VDC(A)	
PC easier monitoring module	A1SS91	PC easier monitoring module	16 [16 output points]	0.08	–	
Memory card interface module	A1SD59J-S2	Memory card interface module	32 [32 special points]	0.05	–	The current consumption describes in connecting A1SD59J-MIF.
Simulation module	A6SIM-X64Y64	An I/O simulation unit used connected to the base unit. Debugging can be executed without connecting the I/O module to the base unit. Use an expansion cable of the AnS series between the main base of the AnS series and the A6SIM-X64Y64.	64 [64 input points] 64 [64 output points]	TYP. 0.3 (When all points "ON")	–	
PROFIBUS interface module	A1SJ71PB92D	PROFIBUS-DPmaster module	32 [32 special points]	0.56	–	
	A1SJ71PB96F	PROFIBUS-FMS interface module	32 [32 special points]	0.56	–	
Device net interface module	A1SJ71DN91	Device net master module	32 [32 special points]	0.24	–	
MODBUS interface module	A1SJ71UC24-R2-S2	RS-232Ctype MODBUS interface module	32 [32 special points]	0.1	–	
	A1SJ71UC24-R4-S2	RS-422/485type MODBUS interface module	32 [32 special points]	0.1	–	

Product Name	Model Name	Description	Number of occupied points (points) [I/O allocation module type]	Current Consumption		Remark
				5VDC(A)	24VDC(A)	
Graphic operation terminal	A985GOT	Large-size graphic operation terminal 256 colors, TFT color, 800×600 dots, high intensity	32 [32 special points]*	0.22 *	–	*When bus connected
	A975GOT	Large-size graphic operation terminal 256 colors, TFT color, 640×480 dots, high intensity				
	A970GOT	Large-size graphic operation terminal 16 colors, TFT color, 640×480 dots, high intensity/ 16 colors, TFT color, 640×480 dots, wide viewing angle/ 8 colors, STN color, 640×480 dots/ 2 colors, STN monochrome, 640×480 dots				
	A960GOT	Large-size graphic operation terminal 2 colors, EL, 640×400 dots				
	A956GOT	Medium-size graphic operation terminal 8 colors, STN color, 320×240 dots/ STN monochrome, 320×240 dots/ 256 colors, TFT color 320×240 dots				
	A956WGOT	Medium-size graphic operation terminal 256 colors, TFT color 480×234 dots				
	A953GOT	Medium-size graphic operation terminal 8 colors, STN color, 320×240 dots/ STN monochrome, 320×240 dots/ 256 colors, TFT color 320×240 dots	–	–	–	For RS-232C connected only
	A951GOT	Medium-size graphic operation terminal 8 colors, STN color, 320×240 dots/ STN monochrome, 320×240 dots/ 256 colors, TFT color 320×240 dots	32 [32 special points]*	0.22 *	–	*When bus connected
	A950GOT	Medium-size graphic operation terminal 8 colors, STN color, 320×240 dots/ STN monochrome, 320×240 dots/ 256 colors, TFT color 320×240 dots	–	–	–	For RS-422 connected only
	GT1565-VTBA	Large-size graphic operation terminal 8.4" 256/65536 colors, TFT color, 640 × 480 dots (When installing a multi color display board, 65536 colors can be displayed.)	32 [32 special points]*	0.12	–	*When bus connected
	GT1575-VTBA	Large-size graphic operation terminal 10.4" 256/65536 colors, TFT color, 640 × 480 dots (When installing a multi color display board, 65536 colors can be displayed.)				
Main Base Unit	A1S32B	2 I/O modules can be installed.	–	–	–	Extension connector on the right and left side each.
	A1S33B	3 I/O modules can be installed.				
	A1S35B	5 I/O modules can be installed.				
	A1S38B	8 I/O modules can be installed.				

Product Name	Model Name	Description	Number of occupied points (points) [I/O allocation module type]	Current Consumption		Remark
				5VDC(A)	24VDC(A)	
Extension base unit	A1S52B	2 I/O modules can be installed.	–	–	–	The power supply module cannot be installed. (Power is supplied from the main base unit.)
	A1S52B-S1					
	A1S55B	5 I/O modules can be installed.				
	A1S55B-S1					
	A1S58B	8 I/O modules can be installed.	–	–	–	
	A1S58B-S1					
	A1S65B	5 I/O modules can be installed.	–	–	–	The power supply module is required.
	A1S65B-S1					
	A1S68B	8 I/O modules can be installed.				
	A1S68B-S1					
Extension cable	A1SC01B	55mm (2.17inch) long flat cable	–	–	–	For extension towards right
	A1SC03B	330mm (13inch) long	–	–	–	Connection cable for the extension base unit.
	A1SCO7B	700mm (27.56inch) long				
	A1SC12B	1200mm (47.24inch) long				
	A1SC30B	3000mm (118.11inch) long				
	A1SC60B	6000mm (236.22inch) long				
	A1SC05NB	450mm (17.72inch) long	–	–	–	Cable for the A□N, A□A extension base unit.
	A1SCO7NB	700mm (27.56inch) long				
	A1SC30NB	3000mm (118.11inch) long				
	A1SC50NB	5000mm (196.86inch) long				

Product Name		Model Name	Description	Applicable model
Memory cassette	E^2PROM	A2SNMCA-30KE	With 30k-step E^2PROM (direct connection)	Direct writing to and reading from a peripheral device is feasible.
Battery		A6BAT	IC-RAM memory backup	Installed in the A2USHCPU-S1, A2USCPU(S1), A2ASCPU(S1/S30) main unit
Connector/terminal block converter unit		A6TBXY36	For the sink-type input module and sink-type output module (standard type)	A1SX41(S1/S2), A1SX42(S1/S2), A1SY41, A1SY41P, A1SY42, A1SY82, A1SH42(S1)
		A6TBXY54	For the sink-type input module and sink-type output module (2-wire type)	
		A6TBX70	For the sink-type input module (3-wire type)	A1SX41(S1/S2),A1SX42(S1/S2),A1SH42(S1)
		A6TBX36-E	For the source-type input module (standard type)	A1SX71, A1SX82-S1, A1SX81(S2)
		A6TBY36-E	For the source-type output module (standard type)	A1SY81, A1SY82
		A6TBX54-E	For the source-type input module (2-wire type)	A1SX71, A1SX82-S1, A1SX81(S2)
		A6TBY54-E	For the source-type output module (2-wire type)	A1SY81, A1SY82
		A6TBX70-E	For the source-type input module (3-wire type)	A1SX71, A1SX82-S1, A1SX81(S2)
Cable for connector/ terminal block converter unit		AC05TB	0.5m (1.64ft.) for the source module	A6TBXY36 A6TBXY54 A6TBX70
		AC10TB	1m (3.28ft.) for the source module	
		AC20TB	2m (6.56ft.) for the source module	
		AC30TB	3m (9.84ft.) for the source module	
		AC50TB	5m (16.40ft.) for the source module	
		AC80TB	8m (26.24ft.) for the source module	
		AC100TB	10m (32.81ft.) for the source module	
		AC05TB-E	0.5m (1.64ft.) for the source module	A6TBX36-E A6TBY36-E A6TBX54-E A6TBY54-E A6TBX70-E
		AC10TB-E	1m (3.28ft.) for the source module	
		AC20TB-E	2m (6.56ft.) for the source module	
		AC30TB-E	3m (9.84ft.) for the source module	
		AC50TB-E	5m (16.40ft.) for the source module	
Relay terminal unit		A6TE2-16SRN	For the sink-type output module	A1SY41, A1SY41P, A1SY42, A1SH42(S1)
Cable for connecting the relay terminal unit		AC06TE	0.6m (1.97ft.) long	A6TE2-16SRN
		AC10TE	1m (3.28ft.) long	
		AC30TE	3m (9.84ft.) long	
		AC50TE	5m (16.40ft.) long	
		AC100TE	10m (32.81ft.) long	
Terminal block cover for the A1S I/O module and the special module		A1STEC-S	Slim-type terminal block cover for the A1S I/O module and the special module (terminal block connector type).	All terminal block connector type modules

Product Name	Model Name	Description	Applicable model
IDC terminal block adapter	A1S-TA32	IDC terminal block adapter for 32 points 0.5mm^2 (AWG20)	A1SX41(S1/S2), A1SX71, A1SY41, A1SY41P, A1SY71
	A1S-TA32-3	IDC terminal block adapter for 32 points 0.3mm^2 (AWG22)	
	A1S-TA32-7	IDC terminal block adapter for 32 points 0.75mm^2 (AWG18)	
Terminal block adapter	A1S-TB32	For 32 points, conversion into Europe type terminal block	A1SX41(S1/S2), A1SX71, A1SY41, A1SY41P, A1SY71
40-pin connector	A6C0N1	Soldering-type, straight out	Sink type (40p FCN)
	A6C0N2	Solderless-type, straight out	
	A6C0N3	Press-fit type, flat cable	
	A6CON4	Soldering-type, straight/diagonal out	
3-pin D-sub connector	A6C0N1E	Soldering-type, straight out	Source type (37p D-sub)
	A6C0N2E	Solderless-type, straight out	
	A6C0N3E	Press-fit type, flat cable	

REMARK

Toa Electric Industrial CO., LTD. provides I/O cables with connectors, which can connect to 40-pin connector (A1SX41,A1SX42,A1SY41,A1SY41P,A1SY42,A1SY42P, etc.) or 37-pin D-sub connector (A1SX81,A1SY81) of I/O modules.

Contact:
TOA ELECTRIC INDUSTRIAL CO., LTD.

(2) Peripheral device

Product Name	Model Name	Remark	
Plasma hand-held graphic programmer	A6PHP-SET	• A6PHP main unit • SW □ GP-GPPA..... • SW □ GP-GPPK..... • SW0-GPPU..... • AC30R4.....	 GPP function start-up floppy disk for the A series. GPP function start-up floppy disk for the K series. User floppy disk (2DD). 3m (9.84ft.)-long RS-422 cable.
Intelligent GPP	A6GPP-SET	• A6GPP main unit • SW □ GP-GPPA..... • SW □ GP-GPPK..... • SW0-GPPU..... • AC30R4.....	 GPP function start-up floppy disk for the A series. GPP function start-up floppy disk for the K series. User floppy disk (2DD). 3m (9.84ft.)-long RS-422 cable.
Composite video cable	AC10MD	• Connection cable for the monitor display of the A6GPP screen. 1m (3.28ft.)long	
RS-422 cable	AC30R4	3m (9.84ft.) long	Connection cable for between the CPU main module and A6GPP/A6PHP.
	AC300R4	30m (98.43ft.) long	
User floppy disk	SW0S-USER	2HD-type	Floppy disk for storing user programs (3.5-inch, pre-formatted).
Cleaning floppy disk	SW0-FDC	For A6GPP/A6PHP	Floppy disk for cleaning the floppy disk drive.
Optional keyboard for A6PHP	A6KB-SET-H	• A6KB keyboard • AC03R4H..... • A6KB-C.....	 0.3m (0.98ft.)-long connection cable between A6KB and A6PHP. Key sheet for the GPP mode of A6KB.
Optional keyboard for A6GPP	A6KB-SET	• A6KB keyboard • AC03R4L..... • A6KB-C.....	 0.3m (0.98ft.)-long connection cable between A6KB and A6GPP. Key sheet for the GPP mode of A6KB.

Product Name	Model Name	Remark
Printer	K6PR-K A7NPR-S1	• For printing out program circuit diagrams and various lists.
RS232C cable	AC30R2	Connection cable for between A6GPP/A6PHP and printer (K6PR-K, A7NPR-S1, and a general-purpose printer with RS-232C interface) 3m (9.84ft.) long
Printer paper	K6PR-Y K7PR-Y	Printer paper for K6PR(S1) and K6PR-K. 9-inch paper. 2000 sheets per unit. Printer paper for A7PR and A7NPR. 11-inch paper. 2000 sheets per unit.
Inked ribbon for K6PR(K)	K6PR-R	Replacement inked ribbon for K6PR-K.
Programming unit	A7PUS	Read/write of the program is performed by connecting to the CPU main module with a RS-422 cable (AC30R4-PUS). (5VDC 0.4A)
	A8PUE	Read/write of the program is performed by connecting to the CPU main module or a RS-422 cable (AC30R4-PUS, AC20R4-A8PU).(5VDC 0.4A)
RS-422 cable	AC30R4-PUS	Connection cable for between the CPU main module and A7PUS, A8PUE. 3m (9.84ft.) long
	AC20R4-A8PU	Connection cable for between the CPU main module and A8PUE. 2m (6.56ft.) long
Data access module	A6DU-B	• Used for monitoring the devices of the CPU module, changing the setting values/ current values, and displaying the operation status. (5VDC 0.23A) • Connect to the CPU module with an AC30R4-PUS cable.
Modem interface module	A6TEL	• An interface module which connects the CPU module and the modem. Using a telephone line, the communication is performed between a remote peripheral device and the CPU module. (5VDC 0.2A) • Connect to the CPU module with an AC30R4-PUS cable.
RS-422 cable	AC30R4 AC300R4	Connection cable for between the CPU main module and A6WU. 3m/30m (9.84ft./ 98.43ft.) long.
	AC03WU	Connection cable for between the A6PHP main unit and A6WU. 0.3m (0.98ft.) long.

2.4 System Configuration Overview

There are four system configuration types as follows:

(1) Stand-alone system ..... A system with a main base unit only, or with a main base system and an extension base unit connected with the extension cable.

(2) Network system ..... A system for controlling multiple PLCs and remote I/O modules.

(3) Computer link system ..... A system for data communication between the CPU module and the computer (personal computer, etc.) by using an A1SJ71UC24 computer link module.

(4) Composite system ..... A system which has a combination of a network system and a computer link system.

The details of the system configuration, number of I/O points, I/O number assignment, etc., of a stand-alone system are listed on the following page.

(a) A2USHCPU-S1, A2USCPU-S1, A2ACPU-S1 and A2ASCPU-S30 system

System configuration	[When the AnS dedicated extension base is used] An example when the 64-point module is installed to each slot is shown. 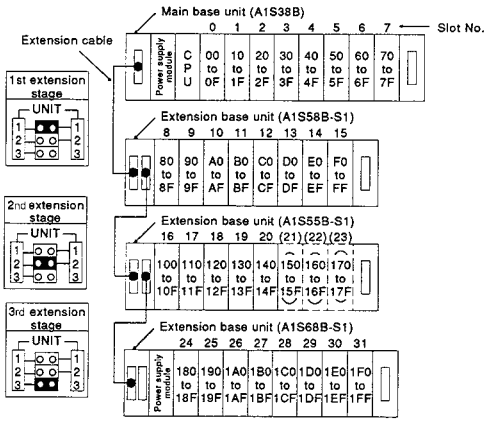 	[When the A□N, A□A extension base is used] An example when the 64-point module is installed to each slot is shown. 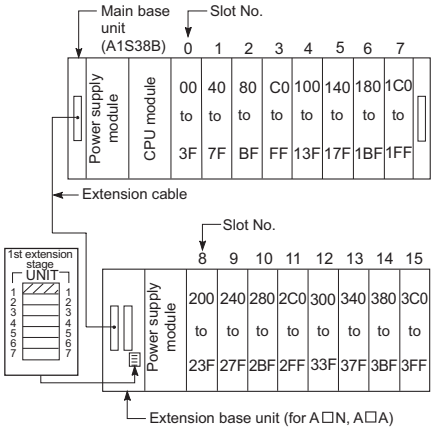
Maximum number of extension stages	3rd extension stage	1st extension stage
Maximum number of I/O modules	16 modules	
Maximum number of I/O points	1024 points	
Main base unit model name	A1S32B, A1S33B, A1S35B, A1S38B	
Extension base unit model name	A1S65B(S1), A1S68B(S1), A1S52B(S1), A1S55B(S1), A1S58B(S1)	A62B, A65B, A68B, A52B, A55B, A58B
Extension cable model name	A1SC03B, A1SC07B, A1SC12B, A1SC30B, A1SC01B (right-side installation), A1SC60B	A1SC05NB, A1SC07NB, A1SC30NB, A1SC50NB
Notes	(1) Only one A□N, A□A extension base can be used. (The second extension module cannot be used.) (2) When the extension base A1S52B(S1), A1S55B(S1), A58B(S1) or A52B, A55B, A58B are used, the 5VDC power is supplied from the power supply module of the main base unit. Before use, refer to Section 6.1.3 and examine if it can be used. (3) Limit the length of extension cable to 6m (236inch) or shorter. (4) When using the extension cable, do not tie it with the main circuit cables, which has high voltage, large current, or install them close to each other.	
I/O number assignment (When I/O assignment is not performed)	(1) Assign I/O numbers to the main base unit first, then to the extension base unit. (2) Assign I/O numbers as if both main base unit and extension base unit have 8 slots each. When the A1S32B/A1S33B/A1S35B for 2/3/5 slots are used as the main base unit, add 6/5/3 slots (96 points/80 points/48 points) and assign the extension base unit I/O numbers. (3) 16 points are assigned to an empty slot. (4) When an extension base for A□N or A□A is used, be sure to set to a single extension level. If it is set to the number of skipped stages, 16 points/slot are assigned to all of skipped stages×8 slots, and thus it does not work. (5) Items (2) to (3) can be changed by the I/O assignment. (Refer to the ACPU/QCPU-A (A Mode) Programming Manual (Fundamentals).)	

(b) A2USCPU, A2ASCPU system

System configuration	[When the AnS dedicated extension base is used] An example when the 32-point module is installed to each slot is shown. 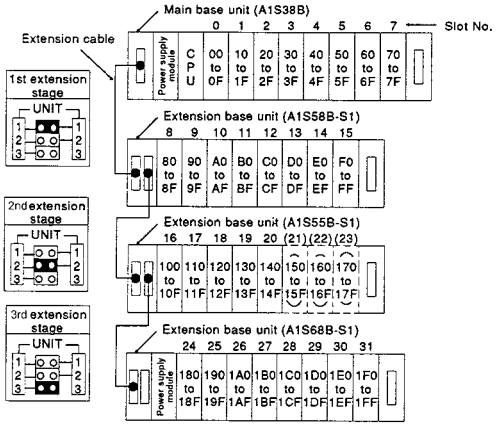 	[When the A□N, A□A extension base is used] An example when the 32-point module is installed to each slot is shown. 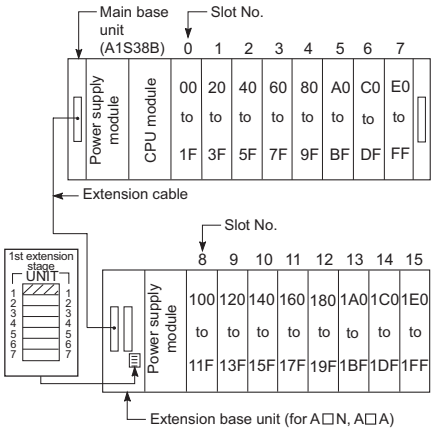
Maximum number of extension stages	3rd extension stage	1st extension stage
Maximum number of I/O modules	16 modules	
Maximum number of I/O points	512 points	
Main base unit model name	A1S32B, A1S33B, A1S35B, A1S38B	
Extension base unit model name	A1S65B(S1), A1S68B(S1), A1S52B(S1), A1S55B(S1), A1S58B(S1)	A62B, A65B, A68B, A52B, A55B, A58B
Extension cable model name	A1SC03B, A1SC07B, A1SC12B, A1SC30B, A1SC01B (right-side installation), A1SC60B	A1SC05NB, A1SC07NB, A1SC30NB, A1SC50NB
Notes	(1) Only one A□N, A□A extension base can be used. (The second extension module cannot be used.) (2) When the extension base A1S52B(S1), A1S55B(S1), A58B(S1) or A52B, A55B, A58B are used, the 5VDC power is supplied from the power supply module of the main base unit. Before use, refer to Section 6.1.3 and examine if it can be used. (3) Limit the length of extension cable to 6m (236inch) or shorter. (4) When using the extension cable, do not tie it with the main circuit cables, which has high voltage, large current, or install them close to each other.	
I/O number assignment (When I/O assignment is not performed)	(1) Assign I/O numbers to the main base unit first, then to the extension base unit. (2) Assign I/O numbers as if both main base unit and extension base unit have 8 slots each. When the A1S32B/A1S33B/A1S35B for 2/3/5 slots are used as the main base unit, add 6/5/3 slots (96 points/80 points/48 points) and assign the extension base unit I/O numbers. (3) 16 points are assigned to an empty slot. (4) When an extension base for A□N or A□A is used, be sure to set to a single extension level. If it is set to the number of skipped stages, 16 points/slot are assigned to all of skipped stages×8 slots, and thus it does not work. (5) Items (2) to (3) can be changed by the I/O assignment. (Refer to the ACPU/QCPU-A (A Mode) Programming Manual (Fundamentals).)	

3 SPECIFICATIONS

The general specification common to various modules is shown.

Item	Specifications					
Operating ambient temperature	0 to 55℃					
Storage ambient temperature	-20 to 75℃					
Operating ambient humidity	10 to 90 % RH, No-condensing					
Storage ambient humidity	10 to 90 % RH, No-condensing					
Vibration resistance	Conforming to JIS B 3502, IEC 61131-2		Frequency	Acceleration	Amplitude	Sweep count
		Under intermittent vibration	10 to 57Hz	–	0.075mm (0.003inch)	10 times each in X, Y, Z directions.
			57 to 150Hz	9.8m/s^2	–	
		Under continuous vibration	10 to 57Hz	–	0.035mm (0.001inch)	–
			57 to 150Hz	4.9m/s^2	–	
Shock resistance	Conforming to JIS B 3502, IEC 61131-2 (147m/s^2 , 3 times in each of 3 directions XYZ)					
Operation ambiance	No corrosive gasses					
Operating elevation*3	2000m (6562ft.) or less					
Installation location	Control panel					
Over voltage category*1	II max.					
Pollution degree*2	2 max.					
Equipment category	Class I					

*1 This indicates the section of the power supply to which the equipment is assumed to be connected between the public electrical power distribution network and the machinery within premises.
Category II applies to equipment for which electrical power is supplied from fixed facilities.
The surge voltage withstand level for up to the rated voltage of 300 V is 2500 V.

*2 This index indicates the degree to which conductive material is generated in terms of the environment in which the equipment is used.
Pollution level 2 is when only non-conductive pollution occurs. A temporary conductivity caused by condensing must be expected occasionally.

*3 Do not use or store the PLC in the environment when the pressure is higher than the atmospheric pressure at sea level.
Otherwise, malfunction may result.
To use the PLC in high-pressure environment, please contact your local Mitsubishi representative.

4 CPU MODULE

4.1 Performance Specifications

Performance specifications of CPU modules are shown below.

(1) A2USHCPU-S1, A2USCPU, A2USCPU-S1

Performance specifications

Item		Model			Remark
		A2USHCPU-S1	A2USCPU	A2USCPU-S1	
Control method		Sequence program control method			
I/O control mode		Refresh mode			Instructions to enable partial direct I/O are available.
Programming language		Language dedicated to sequence control			
		Relay symbol language, logic symbol language, MELSAP-II (SFC)			
Processing speed (sequence instruction)		0.09 μs/step	0.2 μs/step		
Constant scanning (Program startup with a specified interval)		Can be set between 10ms and 190ms in 10ms increments.			Set in special register D9020.
Memory capacity*1		256k bytes (built-in RAM)	64k bytes (built-in RAM)	256k bytes (built-in RAM)	A2SNMCA-30KE (64k bytes) installation possible
Program capacity (steps)	Main sequence program	Max. 30k steps	Max. 14k steps		Set in parameters.
	Sub sequence program	None			
Number of I/O device points*2		8192 points (X/Y0 to X/Y1FFF)			The number of points usable in the program
Number of I/O points		1024 points (X/Y0 to X/Y 3FF)	512 points (X/Y0 to X/Y 1FF)	1024 points (X/Y0 to X/Y 3FF)	The number of points which can be used for accessibility to I/O modules

*1 Each memory capacity for the PLCs is the sum total of the parameters, T/C setting values, program capacities, file registers, comment points, sampling traces and status latches. The memory capacities are unchanged. The extension memories cannot be approved.
For the calculation method of memory capacity, refer to Section 4.2.2.

*2 I/O devices of the actual number of I/O points or later can be used as the MELSECNET/10,MELSECNET(II)/B,MELSECNET/MINI or CC-Link.

Performance specifications (Continued)

Item		Model			Remark
		A2USHCPU-S1	A2USCPU	A2USCPU-S1	
Device points	Internal relay [M]	7144 points (M0 to M999, M2048 to M8191)		Total 8192 shared by M, L, S	The range can be changed by parameters.
	Latch relay [L]	1048 points (L1000 to L2047)			
	Step relay [S]	0 point (None for the initial status)			
	Link relay [B]	8192 points (B0 to B1FFF)			
	Timer [T]	2048 points (Default 256 points) •100ms timer (T0 to T199) ..... Setting time: 0.1 to 3276.7s •10ms timer (T200 to T255) ..... Setting time: 0.01 to 327.67s •100ms retentive timer (none for initial) .... Setting time: 0.1 to 3276.7s •Expansion timer (T256 to T2047) ..... Time set by word device (D, W, R)			The range and number of points for use set by parameters (Refer to Section 4.2.1)
	Counter [C]	1024 points (Default: 256 points) •Normal counter (C0 to C255) ..... Setting range : 1 to 32767 times •Interrupt counter (none for default) .....C224 to C255 possible depending on setting •Expansion counter (C256 to C1023) ..... Count value set by word device (D,W,R)			The range and number of points for use set by parameters (Refer to Section 4.2.1)
	Data register [D]	8192 points (D0 to D8191)			
	Link register [W]	8192 points (W0 to W1FFF)			
	Annunciator [F]	2048 points (F0 to F2047)			Fault finding device
	File register [R]	8192 points (R0 to R8191)			Points set by parameters
	Accumulator [A]	2 points (A0, A1)			
	Index register [V, Z]	14 points (V, V1 to V6, Z, Z1 to Z6)			
	Pointer [P]	256 points (P0 to P255)			
	Interrupt pointer [I]	32 points (I0 to I31)			
	Special relay [M]	256 points (M9000 to M9255)			
	Special register [D]	256 points (D9000 to D9255)			

Performance specifications (Continued)

Item	Model			Remark
	A2USHCPU-S1	A2USCPU	A2USCPU-S1	
Comment	Max. 4032 points (Set by the unit of 64 points)			Set in parameters.
Expanded comment	Max. 3968 points (Set with the unit of 64 points)			
Switch output mode from STOP to RUN	Select either re-output the operation status before stopping (default) or output after exectution of operation.			Set in parameters.
Self-diagnosis function	Watchdog error supervision (watchdog timer fixed to 200ms) Error detection in the memory, CPU, I/O, battery, etc.			Refer to Section 4.1.4 for details.
Operating mode when there is an error	Select STOP or continue			Set in parameters. (refer to Section 4.2.1)
RUN time startup method	Initial start (upon power supply on/power restoration after power failure, automatic restart by turning the "RUN" switch of the CPU or ON.)			
Latch (power failure compensation) range	L1000 to L2047 (default) (Possible to set latch ranges for L, B, T, C, D, W)			Range set by parameters.
Remote RUN/PAUSE contacts	Possible to set one contact point for each of RUN/PAUSE from X0 to X1FFF.			Set in parameters.
Print title regisration	YES (128 characters)			Set in parameters.
Keyword registration	YES			Set in parameters.
I/O assignment	Possible to register number of occupied I/O points and module model names.			
Step operation	Possible to execute or stop sequence program operations.			Refer to Section 4.3
Interrupt processing	Possible to operate an interrupt program by the interrupt module or constant period interrupt signal.			
Data link	MELSECNET/10, MELSECNET(II)/B			
Clock function	Year, month, day, hour, minute, second, day of the week (automatic detection of the leap year) Accuracy ▪ -3.2 to +5.1s(TYP.+1.6s)/d at 0℃ ▪ -1.2 to +5.3s(TYP.+2.2s)/d at 25℃ ▪ -8.2 to +3.5s(TYP.+1.6s)/d at 55℃			
Allowable momentary power failure period	By power supply module			Refer to Section 5.1
5VDC internal current consumption	0.32A			
Weight	0.46kg	0.41kg		
External dimensions	130mm (5.12inch) × 54.5mm (2.15inch) ×93.6mm (3.69inch)			

(2)A2ACPU, A2ASCPU-S1, A2ASCPU-S30

Performance specifications

Item		Model			Remark
		A2ASCPU	A2ASCPU-S1	A2ASCPU-S30	
Control method		Sequence program control method			
I/O control mode		Refresh mode			Instructions to enable partial direct I/O are available.
Programming language		Language dedicated to sequence control			
		Relay symbol language, logic symbol language, MELSAP-II (SFC)			
Processing speed (sequence instruction)		0.2μs/step			
Constant scan (Program startup with a specified interval)		Can be set between 10ms and 190ms in 10ms increments.			Set in special register D9020.
Memory capacity*1		64k bytes (built-in RAM)	256k bytes (built-in RAM)		A2SNMCA-30KE (64k bytes) installation possible
Program capacity (steps)	Main sequence program	Max. 14k steps		Max. 30k steps	Set in parameters.
	Sub sequence program	None			
Number of I/O device points*2		8192 points (X/Y0 to X/Y1FFF)			The number of points usable in the program
Number of I/O points		512 points (X/Y0 to X/Y 1FFF)	1024 points(X/Y0 to X/Y 3FFF)		The number of points which can be used for accessibility to I/O modules

*1 Each memory capacity for the PLCs is the sum total of the parameters, T/C setting values, program capacities, file registers, comment points, sampling traces and status latches. The memory capacities are unchanged. The extension memories cannot be approved.
For the calculation method of memory capacity, refer to Section 4.2.2.

*2 I/O devices of the actual number of I/O points or later can be used as the MELSECNET/10,MELSECNET(II)/B,MELSECNET/MINI or CC-Link.

Performance specifications (Continued)

Item		Model			Remark
		A2ASCPU	A2ASCPU-S1	A2ASCPU-S30	
Device points	Internal relay [M]	7144 points (M0 to M999, M2048 to M8191)		Total 8192 shared by M, L, S	The range can be changed by parameters.
	Latch relay [L]	1048 points (L1000 to L2047)			
	Step relay [S]	0 point (None for the initial state)			
	Link relay [B]	4096 points (B0 to BFFF)			
	Timer [T]	2048 points (Default: 256 points) •100ms timer (T0 to T199) ..... Setting time: 0.1 to 3276.7s •10ms timer (T200 to T255) ..... Setting time: 0.01 to 327.67s •100ms retentive timer (none for initial) .... Setting time: 0.1 to 3276.7s •Expansion timer (T256 to T2047) ..... Time set by word device (D, W, R)			The range and number of points for use set by parameters (Refer to Section 4.2.1)
	Counter [C]	1024 points (Default: 256 points) •Normal counter (C0 to C255) ..... Setting range : 1 to 32767 times •Interrupt counter (none for default) .....C224 to C255 possible depending on setting •Expansion counter (C256 to C1023) ..... Count value set by word device (D,W,R)			The range and number of points for use set by parameters (Refer to Section 4.2.1)
	Data register [D]	6144 points (D0 to D6143)			
	Link register [W]	4096 points (W0 to WFFF)			
	Annunciator [F]	2048 points (F0 to F2047)			Fault finding device
	File register [R]	8192 points (R0 to R8191)			Points set by parameters
	Accumulator [A]	2 points (A0, A1)			
	Index register [V, Z]	14 points (V, V1 to V6, Z, Z1 to Z6)			
	Pointer [P]	256 points (P0 to P255)			
	Interrupt pointer [I]	32 points (I0 to I31)			
	Special relay [M]	256 points (M9000 to M9255)			
	Special register [D]	256 points (D9000 to D9255)			

Performance specifications (Continued)

Item	Model			Remark
	A2ASCPU	A2ASCPU-S1	A2ASCPU-S30	
Comment	Max. 4032 points (Set with the unit of 64 points)			Set in parameters.
Expanded comment	Max. 3968 points (Set with the unit of 64 points)			
Switch output mode from STOP to RUN	Select either re-output the operation status before stopping (default) or output after exectution of operation.			Set in parameters.
Self-diagnosis function	Watchdog error supervision (watchdog timer fixed to 200ms) Error detection in the memory, CPU, I/O, battery, etc.			Refer to Section 4.1.4 for details.
Operating mode when there is an error	Select STOP or continue			Set in parameters. (refer to Section 4.2.1)
RUN time start-up method	Initial start (upon power supply on/power restoration after power failure, automatic restart by turning the "RUN" switch of the CPU or ON.)			
Latch (power failure compensation) range	L1000 to L2047 (default) (Possible to set latch ranges for L, B, T, C, D, W)			Range set by parameters.
Remote RUN/PAUSE contacts	Possible to set one contact point for each of RUN/PAUSE from X0 to X1FFF.			Set in parameters.
Print title regisration	YES (128 characters)			Set in parameters.
Keyword registration	YES			Set in parameters.
I/O assignment	Possible to register number of occupied I/O points and module model names.			
Step operation	Possible to execute or stop sequence program operations.			Refer to Section 4.3
Interrupt processing	Possible to operate an interrupt program by the interrupt module or constant period interruput signal.			
Data link	MELSECNET/10, MELSECNET(II)/B			
Clock function	Year, month, day, hour, minute, second, day of the week (automatic detection of the leap year) Accuracy ▪ -3.2 to +5.1s(TYP.+1.6s)/d at 0℃ ▪ -1.2 to +5.3s(TYP.+2.2s)/d at 25℃ ▪ -8.2 to +3.5s(TYP.+1.6s)/d at 55℃			
Allowable momentary power failure period	By power supply module			Refer to Section 5.1
5VDC internal current consumption	0.32A			
Weight	0.41kg			
External dimensions	130mm (5.12inch) × 54.5mm (2.15inch) ×93.6mm (3.69inch)			

CAUTION

When the conventional system software packages and peripheral devices are used, the usable device range are limited.
Details are provided in Section 2.2.3.

4.1.1 Overview of operation processing

An overview of processing when starting power supply for the CPU module to execution of the sequence program is explained.
CPU modules processing may be categorized roughly into the following four kinds:

(1) Initial processing
This is a preprocess to execute sequence operations, and is performed only once upon power-on or reset.
(a) Resets the I/O module and initialize it.
(b) Initializes the range of data memory for which latch is not set up (sets the bit device to OFF and the word device to 0).
(c) Allocates I/O address of the I/O module automatically based on the I/O module number or the position of installation on the extension base unit.
(d) Execute the self-diagnostics check for the parameter setting and the operation circuit. (Refer to Section 4.1.4)
(e) For the control station of the MELSECNET/10 or the master station of MELSECNET (II)/B, sets the network/link parameter information to the network/data-link module, and commences the network communication/data link.

(2) Refresh processing of I/O module
Executes the refresh processing of I/O module.
(Refer to the ACPU/QCPU-A (A Mode) Programming Manual (Fundamentals).)

(3) Operation processing of a sequence program
Executes the sequence program from step 0 to the END instruction written in the PLC CPU.

(4) END processing
This is a post-process to finish one cycle of operation processing of the sequence program and to return the execution of the sequence program to the step 0.
(a) Executes self-diagnosis checks, such as a fuse blown, a module verify, and a low battery.
(Refer to Section 4.1.4)
(b) Updates the current value of the timer, sets the contact ON/OFF, updates the current value of the counter and sets the contact to ON.
(Refer to the ACPU/QCPU-A (A Mode) Programming Manual (Fundamentals).)
(c) Executes the data exchange between the PLC CPU and a computer link module (e.g.A1SJ71UC24-R2), when there is a data read or write request from the computer link module.

(d) Executes the refresh processing when there is a refresh request from the network module or link module.

(e) When the trace point setting of sampling trace is by each scan (after the execution of END instruction), stores the device status for which it is setup into the sampling trace area.

(f) By setting link information, I/O storage device, etc. of the MELSECNET/MINI-S3 to the parameters, auto refresh processing of the A1SJ71PT32-S3 master module is performed. (Refer to Section 4.2.6)

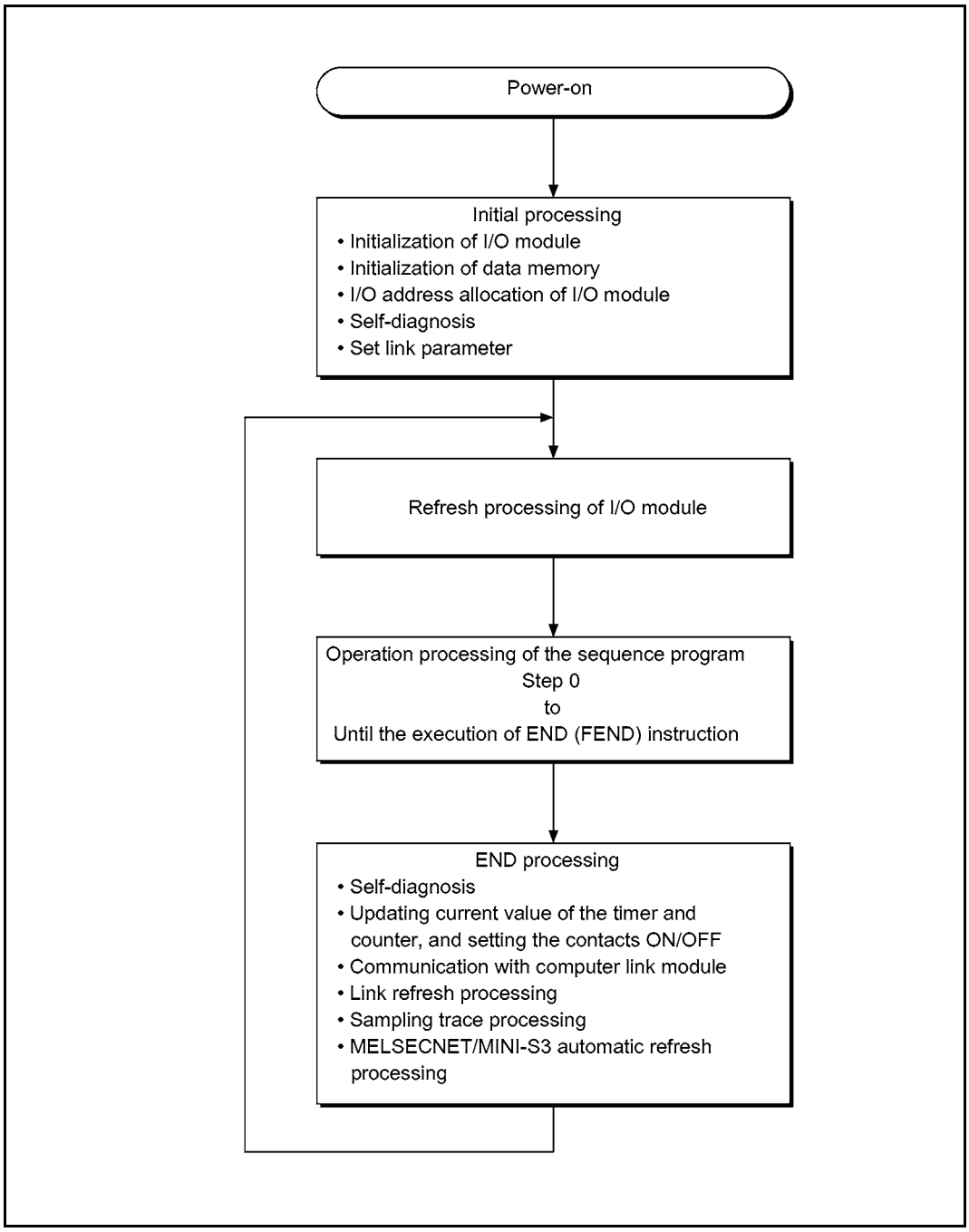

Figure 4.1 CPU module operation processing

POINT
When executing the FROM/TO instruction for the special function module frequently in short scan time, it may cause the target special function module operation error. When executing FROM/TO instruction to the special function module, set the processing time and converter time by using such as a timer and a constant scan function of the special function module.

4.1.2 Operation processing of RUN, STOP, PAUSE, and STEP-RUN

The PLC CPU has four kinds of operation status: RUN status, STOP status, PAUSE status, and step operation (STEP-RUN) status.
Operation processing of PLC CPU in each operation status is explained.

(1) RUN status operation processing
- (a) The repetition of sequence program operation in the order from step 0 → END (FEND) instruction → step 0 is called the RUN status.
- (b) When entering the RUN status, the output status escaped by STOP is output depending on the output mode setting of parameter upon STOP → RUN.
- (c) Processing time from switching STOP → RUN to the start of the sequence program operation is usually one to three seconds, although it may vary depending on the system configuration.

(2) STOP status operation processing
- (a) The termination of operation of the sequence program by the use of the RUN/STOP key switch, the remote STOP, or at the execution of STOP instruction is called the STOP status. (Refer to Section 4.3)
- (b) When entering the STOP status, it escapes the output status and sets all output points to OFF. Data memories except for output (Y) are retained.

(3) PAUSE status operation processing
- (a) The termination of operation of sequence program while retaining output and data memories is called the PAUSE status. (Refer to Section 4.3)

(4) Step operation (STEP-RUN) operation processing
- (a) Step operation is an operation mode wherein operation processing of a sequence program can be paused/resumed by each instruction from peripheral device(s). (Refer to Section 4.3)
- (b) Since an operation processing is paused while retaining the output and data memories, condition of the execution can be confirmed.

(5) Operation processing of PLC CPU when RUN/STOP key switch is operated

RUN/STOP key switch operation	PLC CPU operation processing				Remark
	Operation processing of a sequence program	External output	Data memory		
			M, L, S, T, C, D	Y	
RUN → STOP	Executes up to the END instruction, then stops.	OS saves the output status, and sets all the output points to OFF.	Retains the condition immediately prior to entering the STOP status.	OS saves the output status, and sets all the output points to OFF.	
STOP → RUN	Starts.	Determined by the output mode of the parameter upon STOP → RUN.	Starts operations from the condition immediately prior to entering the STOP status.	Determined by the output mode of the parameter upon STOP → RUN.	

POINT

1. Whether in the RUN state, STOP state or PAUSE state, PLC CPU is performing the following:
   - Refresh processing of I/O module
   - Data communication with computer link module
   - Link refresh processing.

   Thus, even in the STOP or PAUSE status, monitoring or testing I/O with peripheral devices, reading or writing from a computer link module, and communication with other stations by MELSECNET/10, MELSECNET/MINI-S3 are possible.
2. STEP-RUN executes the END processing when executes the END (FEND) instruction during step operation.
   For current value update of the timer, the PLC adds 1 by 1 scan on the 10ms timer and adds 1 by 10 scan on the 100ms timer.

4.1.3 Operation processing upon instantaneous power failure

The PLC CPU detects a momentary power failure when input power voltage supplied to the power supply module becomes lower than the specified range.
When the PLC CPU detects an instantaneous power failure, the following operation processing is performed.

(1) When an instantaneous power failure shorter than allowable momentary power failure period occurred:
   (a) When an instantaneous power failure occurred, the operation processing is interrupted while the output status is retained.
   (b) When the instantaneous power failure is reset, the operation processing will be continued.
   (c) When an instantaneous power failure occurred and the operation was interrupted, measurement of the watchdog timer (WDT) continues. For instance, in the case that WDT is 200ms and the scan time is 190ms, if an instantaneous power failure of 15ms occurs, it causes the watchdog timer error.

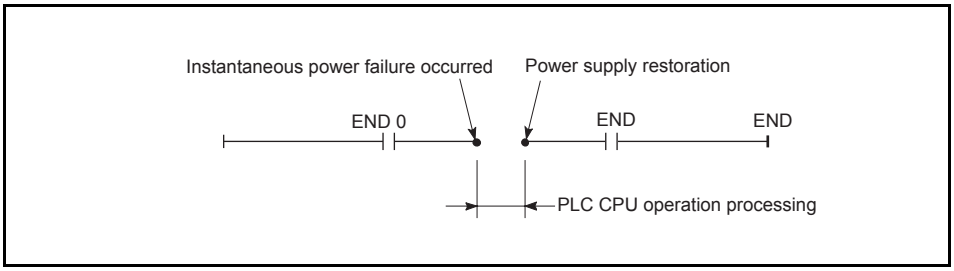

Operation processing upon instantaneous power failure

(2) When an instantaneous power failure longer than the allowable momentary power failure period occurred:
   The PLC CPU performs the initial start.
   The operation processing is the same as power-on or reset operation with the reset switch.

4.1.4 Self-diagnostics functions

Self-diagnostics is a function with which a CPU module diagnoses itself for the presence of any abnormalities.

(1) In turning on the power supply to the PLC or when an abnormality occurred while the PLC is running, the CPU module's self-diagnostics processing prevents malfunctions of the PLC. It also performs preventive maintenance by detecting the abnormality, displaying an error indication, halting the operation of the CPU module, and so on.

(2) The CPU module stores the error occurred last to a special register D9008 as an error code, and stores further detailed error code to a special register D9091.

(3) Even with the power-off, the latest error information and 15 errors in the past, that is 16 errors, are stored by battery backup.Contents of errors can be checked by the peripheral device. For the method of checking the errors in the past, refer to Selfdiagnostics of the Operating manual for peripheral device.
Reset (All clear) in the past error information can be performed by operating "latch clear" in the CPU module.
Contents of the error information are shown below: (The error which occurred last)

(a) The time and date of occurrences of errors ..... Year, month, day, hour, minute, second (Clock data)

(b) Error Code ..... The content of the special register D9008

(c) Detailed error code ..... The content of the special register D9091

(d) Error step ..... The content of the special register D9010

Note that the following three error codes show the contents different from the contents usually shown in detailed error code and in error step when monitoring by the peripheral device.

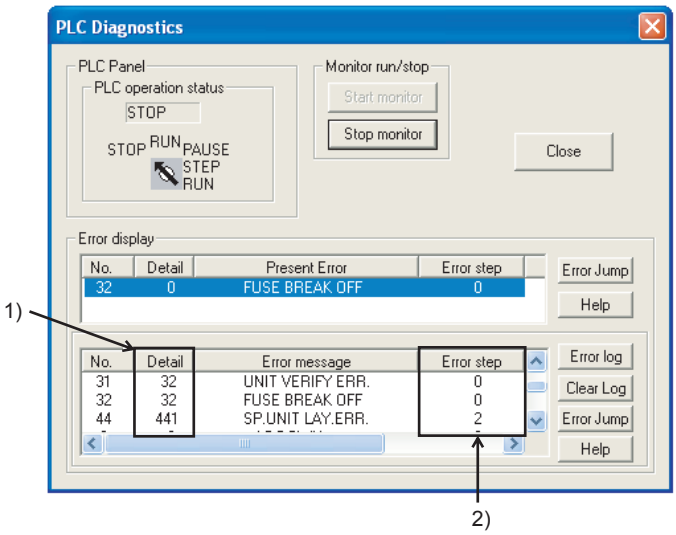

Error information confirmation screen of GX Developer

Target error code: error message	1) Detail	2) Error step
31: UNIT VERIFY ERR.	I/O module verify error module No.*1 (Content of D9002)	- ("0" is displayed)
32: FUSE BREAK OFF	Fuse blown module No.*1 (Content of D9000)	- ("0" is displayed)
44: SP.UNIT LAY. ERR.	Detailed error code (Content of D9091)	I/O slot No.*2

*1 The module No. to be displayed is the numerical value expressing the first 2 digits of head I/O number (3 digits in hexadecimal) in decimal. (Example: The value "32" is displayed in "Detail" column of the error code 31 in above 1). When expressing it in hexadecimal, 32 (decimal) → 20 (hexadecimal), and then expressing it in 3 digits, 20 (2 digits) → 200 (3 digits) = Module No. of error target.)

*2 The I/O slot No. can be checked by monitoring the parameter setting of theperipheral device. The following values shown in frame in solid line are slot No.

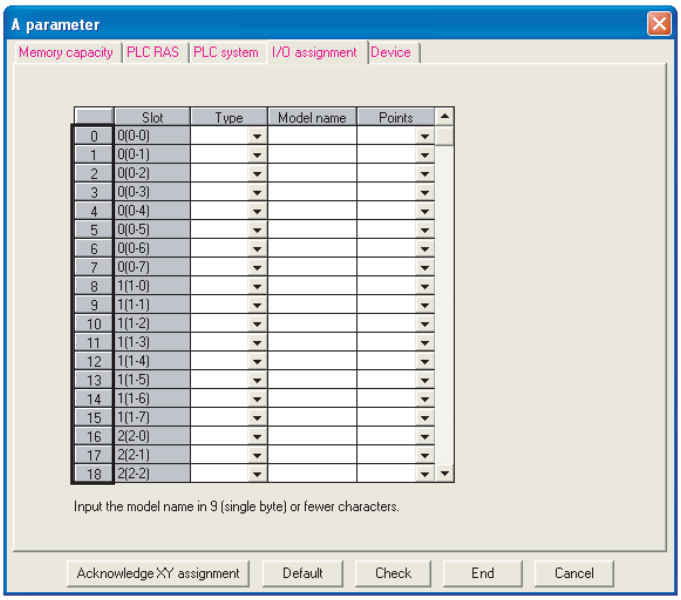

Parameter setting screen of GX Developer

(4) When the self-diagnostics detects an error, the module will be in one of the two modes below:
- Mode wherein operation of the PLC is stopped
- Mode wherein operation of the PLC continues

In addition, there are errors with which the operation can be selected to stop or to continue by the parameter setting.

(a) When an operation stop error is detected by the self-diagnostics, the operation is stopped at the time of detection of the error, and sets the all outputs(Y) to OFF.

(b) When an operation continued error is detected, the only part of the program with the error is not executed while the all other part is executed.
Also, in case of module verify error, the operation is continued using the I/O address prior to the error.

When an error is detected, error occurrence and error contents are stored in the special relay (M) and special register (D), so that in case of the continue mode, the program can use the information to prevent any malfunctions of the PLC or mechanical system.

Error descriptions detected by the self-diagnostics are shown in the next page.

REMARK

(1) As to the LED indication message, the order of priority of the LED indication can be changed if CPU module is in the operation mode. (An error code is stored in the special register)
(2) When the special relay M9084 is ON, checking on fuse blown, I/O verification and the battery are not performed. (an error code is not stored in the special register)
(3) The "Error indication of peripheral device" in the table of self-diagnostics functions are messages indicated by the PLC diagnosis of peripheral devices.

Self-diagnostics list

Diagnosis item		Diagnosis timing	CPU module status	Status of "RUN" LED	Contents of error indication	Error code (D9008)
Memory error	Instruction code check	Upon execution of each instruction	Stop	Flickering	INSTRCT CODE ERR.	10
	Parameter setting check	• When switching ON or resetting • When switching from (STOP, PAUSE) to (RUN, STEP → RUN)			PARAMETER ERROR	11
	No END instruction	• When M9056 or M9057 is ON • When switching from (STOP, PAUSE) to (RUN, STEP → RUN)			MISSING END INS.	12
	Unable to execute instruction	• CJ SCJ JMP CALL(P) FOR to NEXT • Upon execution of each instruction • When switching from (STOP, PAUSE) to (RUN, STEP → RUN)			CAN'T EXECUTE(P)	13
	Format (CHK instruction) check	• When switching from (STOP, PAUSE) to (RUN, STEP → RUN)			CHK FORMAT ERR.	14
	Unable to execute instruction	• When interruption occurred • When switching from (STOP, PAUSE) to (RUN, STEP → RUN)			CAN'T EXECUTE(I)	15
CPU error	RAM check	• When switching ON or resetting • When M9084 is ON during STOP	Stop	Flickering	RAM ERROR	20
	Operation circuit check	• When switching ON or resetting			OPE.CIRCUIT ERR.	21
	Watchdog error supervision	• Upon execution of END instruction			WDT ERROR	22
	END instruction not executed	• Upon execution of END instruction			END NOT EXECUTE	24
	Main CPU check	Always			MAIN CPU DOWN	26
I/O error	Module verification error *1 (Default: stop)	Upon execution of END instruction (However, not checked when M9084 is ON.)	Stop/Operate	Flickering/ ON	UNIT VERIFY ERR.	31
	Fuse blown *1 (Default: stop)	Upon execution of END instruction (However, not checked when M9084 is ON.)			FUSE BREAK OFF	32
Special function module error	Control bus check	Upon execution of FROM, TO instruction	Stop	Flickering	CONTROL-BUS ERR.	40
	Special function module error	Upon execution of FROM, TO instruction			SP.UNIT DOWN	41
	Link module error	• When switching ON or resetting • When switching from (STOP, PAUSE) to (RUN, STEP → RUN)			LINK UNIT ERROR	42
	I/O interrupt error	When interruption occurs			I/O INT.ERROR	43
	Special function module allocation error	• When switching from (STOP, PAUSE) to (RUN, STEP-RUN)			SP.UNIT LAY.ERR.	44
	Special module access error *1 (Default: stop)	Upon execution of FROM, TO instruction	Stop/Operate	Flickering/ ON	SP.UNIT ERROR	46
	Link parameter error	• When switching from (STOP, PAUSE) to (RUN, STEP-RUN)	Operate	ON	LINK PARA.ERROR	47
Battery	Low battery	Always (However, not checked when M9084 is ON.)	Operate	ON	BATTERY ERROR	70
Operation error *1 (Default: stop)		Upon execution of each instruction	Stop/Operate	Flickering/ ON	OPERATION ERROR *2 [<CHK> ERROR□□□]	50

*1 Can be changed by the parameter settings of the peripheral devices.
*2 Indicated as a three-digit trouble code only for errors with the "CHK" instruction.

4.1.5 Device list

Device means a general name for such as a contact, coil and timer used on the program operations in a PLC.
Usage ranges and device names of the PLC are shown below.
For * in the devices below, they can be used by setting the parameters on each peripheral device. Also, they can be changed the usage ranges allocation.
Set the parameters depending on the usage system and contents of the programs.
For the detailed setting for parameters, refer to Section 4.2.1 List of parameter setting range.

Device list

Device		Range of usage (points)			Description of device
		A2USHCPU-S1	A2USCPU A2ASCPU	A2USCPU-S1 A2ASCPU-S1 A2ASCPU-S30	
X	Input	X/Y0 to X/Y3FF (1024 points)	X/Y0 to X/Y1FF (512 points)	X/Y0 to X/Y3FF (1024 points)	Used for the supply PLC commands and data from the external devices such as push buttons, select switches, limit switches and digital switches.
Y	Output				Used to the output control results of the program to the external devices such as solenoids, magnetic switches, signal lights and digital display device.
X	Input	X/Y0 to X/Y1FFF(8192 points)			• Possible to use in a program after the I/O points usage range per each PLC (described above) to up to 8192 points (the external output is not allowed). (external output is not allowed) • Objective is to allocate for auto I/O refresh of MELSECNET/MINI-S3, for remote I/O of MELSECNET/10, for remote I/O of MELSECNET(B), or for CC-Link.
Y	Output				
M	Special relay	M9000 to M9255 (256 points)			An auxiliary relay used inside a PLC set in advance for a special application.
	*Internal relay	M/L/S0 to M/L/S8191 (8192 points) 8192 points as a total of M, L, S			An auxiliary relay inside a PLC which cannot output directly to external devices.
L	*Latch relay				An auxiliary relay inside a PLC which cannot output directly to the external devices. Has the power failure compensation function.
S	*Step relay				Used in the same manner as the internal relay (M). Used as a relays to indicate the stage number of process stepping program, etc.
R	Link relay	B0 to B1FFF (8192 points)			An internal relay for data link and cannot output to external devices. The range not set by the link parameters can be used as a substitute for a data register.
F	Annunciator	F0 to F2047 (2048 points)			For fault detection. A fault finding program is created in advance, and if it becomes ON during RUN, the number is stored in a special register D.
T	*100ms timer	T0 to T2047 (2048 points) (Register for storing setting value(s) is required for T256 and later.)			Up-timing-timer. There are three kinds: 100ms timer, 10ms timer and 100ms retentive timers.
	*10ms timer				
	*100ms retentive timer				
C	*Counter	C0 to C1023 (1024 points) Interrupt counter C224 to C255 fixed. Register for storing setting value(s) is required for C256 and later.			Up-timing There are two kinds: up-timing counter used in PLC programs which counts number of interrupts.
	*Interrupt counter				

Device list (From the previous page)

Device		Range of usage (points)			Description of device
		A2USHCPU-S1	A2ASCPU	A2USCPU-S1 A2ASCPU-S1 A2ASCPU-S30	
D	Data register	A2USHCPU-S1, A2USCPU, A2USCPU-S1 : D0 to D8191 (8192 points) A2ASCPU, A2ASCPU-S1, A2ASCPU-S30 : D0 to D6143 (6144 points)			Memory used to store data inside PLC.
	Special register	D9000 to D9255 (256 points)			Data memory set in advance for the special use.
W	Link register	A2USHCPU-S1, A2USCPU, A2USCPU-S1 : W0 to W1FFF (8192 points) A2ASCPU, A2ASCPU-S1, A2ASCPU-S30 : W0 to WFFF (4096 points)			Register for a data link. The range not set by the link parameters can be used as a substitute for a data register.
R	*File register	R0 to R8191 (8192 points)			For expanding the data register. User memory area is used for this.
A	Accumulator	A0, A1 (2 points)			Data register used to store a operation result of basic and application instructions.
Z V	Index register	V,V1 to V6,Z,Z1 to Z6 (14 points)			Used for qualification of devices (X, Y, M, L, B, F, T, C, D, W, R, K, H, P)
N	Nesting	N0 to N7 (8 levels)			Indicates nesting structure of a master control.
P	Pointer	P0 to P255 (256 points)			Indicates destination of the branch instructions (CJ, SCJ, CALL, JMP).
I	Interrupt pointer	I0 to I31 (32 points)			When an interruption factor is generated, it indicates the destination of the interrupt program corresponding to the interruption factor.
K	Decimal constant	K-32768 to K32767 (16-bit instruction) K-2147483648 to K2147483647 (32-bit instruction)			Used to set timer/counter, pointer number, interrupt pointer number, bit device digits, and values for basic and application instructions.
H	Hexadecimal	H0 to HFFFF (16-bit instruction) H0 to HFFFFFFFF (32-bit instruction)			Used to the set values for basic and application instructions.

REMARK

The step relay in the list above can be used in the same manner as the internal relay (M). For the program creation with two kinds of functions in one program, it is usable to divide the step relay (S) and internal relay (M) into a category of such as a function and usage in using.

4.2 Parameter Setting Ranges

Parameter contents in the CPU modules and parameter setting ranges are explained below.

4.2.1 List of parameter setting range

Parameters are used for allocating the user memory area inside the CPU module, setting various functions and device ranges.
A parameter is usually stored in the first 3k bytes of the user memory area.
Among the parameters, the network parameter for MELSECNET/10 is allocated and stored after the main sequence program area. (Refer to Section 4.2.2 for details).
Even though a default value can be used, parameter value can be changed to a value suitable for a particular application within a setting range by the peripheral devices.

List of parameter setting range

Item		Default value	Setting range		
			A2USHCPU-S1 A2ASCPU-S30	A2USCPU A2ASCPU	A2USCPU-S1 A2ASCPU-S1
Main sequence program capacity		6k steps	1 to 30k steps (1k steps = in 2k-byte units)	1 to 14k steps (1k steps = in 2k-byte units)	
File register capacity		–	0 to 8k points (1k points = in 2k-byte units)		
Extension file register capacity		–	1 block = 16k bytes (Block setting for from No.1 to No.8, from No.10 to the end of unused area in the memory) [Automatically setup in the unused area in the memory based on the file register setting.]		
Comment capacity		–	0 to 4032 points (64 points unit = in 1k byte units) [When comment capacity is set up, 1k byte is added to the memory area.]		
Expanded comment capacity		–	0 to 3968 points (64 points unit = in 1k byte units)		
Status latch		–	No parameter setting Performed by setting up extension file registers to store device and result in each of status latch and sampling trace modes. (Refer to the Type ACPU/QCPU-A (A Mode)(Fundamentals) Programming Manual.)		
Sampling trace		–			
Latch range setting (latch)	Link relay (B)	• Latch: L1000 to L2047 only. • None for others.	A2USHCPU-S1, A2USCPU, A2USCPU-S1: B0 to B1FFF (unit: 1 point) A2ASCPU, A2ASCPU-S1, A2ASCPU-S30: B0 to BFFF (unit: 1 point)		
	Timer (T)		T0 to T255 (unit: 1 point) T256 to T2047 (unit: 1 point)		
	Counter (C)		C0 to C255 (unit: 1 point) C256 to C1023 (unit: 1 point)		
	Data register (D)		A2USHCPU-S1, A2USCPU, A2USCPU-S1: D0 to D8191 (unit: 1 point) A2ASCPU, A2ASCPU-S1, A2ASCPU-S30: D0 to D6143 (unit: 1 point)		
	Link register (W)		A2USHCPU-S1, A2USCPU, A2USCPU-S1: W0 to W1FFF (unit: 1 point) A2ASCPU, A2ASCPU-S1, A2ASCPU-S30: W0 to WFFF (unit: 1 point)		
Settings for internal relay (M), latch relay (L), step relay (S)		M0 to M999 M2048 to M8191 L1000 to L2047 None for S	M/L/S0 to M/L/S8191 (where M, L, S are serial numbers)		

List of parameter setting range (From the previous page)

Item		Default value	Setting range		
			A2USHCPU-S1 A2ASCPU-S30	A2USCPU A2ASCPU	A2USCPU-S1 A2ASCPU-S1
Timer settings	T0 to T255	T0 to T199 (100ms) T200 to T255(10ms)	▪ 256 points by 100ms, 10ms, and retentive timers (in 8 point units) ▪ Timers are serial numbered.		
	T256 to T2047	–	▪ 1792 points by 100ms, 10ms, and retentive timers (in 16 point units) ▪ Timers are serial numbered. ▪ Devices set: D, R, W (Setting required if 257 points or more.)		
Counter setting	Interrupt counter setting	–	▪ Sets whether to use interrupt counter (C224 to C225) or not.		
	Points used	256 points (C0 to C255)	▪ 0 to 1024 points (in 16 point units) ▪ Devices set: D, R, W (Setting required if 257 points or more.)		
I/O assignment		–	▪ 0 to 64 points (in 16 point units) ..... Input module/output module special function module/empty slot ▪ Module model name registration is possible.		
Remote RUN/PAUSE contact setting		–	▪ X0 to X1FFF ▪ RUN/PAUSE ..... 1 point (PAUSE contact setting is not only allowed.)		
Operating mode when there is an error	Fuse blown	Continue	Stop/Continue		
	Module comparison error	Stop			
	Computation error	Continue			
	Special function access error	Stop			
Data communication request batch processing		None	Yes/No		
Output mode switching at STOP → RUN		Output data at time of STOP restored	Output before STOP/after operation		
Print title regisration		–	▪ 128 characters		
Keyword registration		–	▪ Up to 6 characters in hexadecimal (0 to 9, A to F)		
MELSECNET/10 link range setting	Number of link stations	–	Optical link ..... Max. 64 stations Coaxial link ..... Max. 32 stations		
	I/O (X/Y)		X/Y0 to X/Y1FFF (unit: 16 points)		
	Link relay (B)		A2USHCPU-S1, A2USCPU, A2USCPU-S1: B0 to B1FFF (unit: 16 points) A2ASCPU, A2ASCPU-S1, A2ASCPU-S30: B0 to BFFF (unit: 16 points)		
	Link register (W)		A2USHCPU-S1, A2USCPU, A2USCPU-S1: W0 to W1FFF (unit: 1 point) A2ASCPU, A2ASCPU-S1, A2ASCPU-S30: W0 to WFFF (unit: 1 point)		

List of parameter setting range (From the previous page)

Item		Default value	Setting range		
			A2USHCPU-S1 A2ASCPU-S30	A2USCPU A2ASCPU	A2USCPU-S1 A2ASCPU-S30
Link range settings for MELSECNET II	Number of link stations	–	▪ 0 to 64 station(s)		
	I/O (X/Y)		X/Y0 to X/Y3FF (in 16 point units)	X/Y0 to X/Y1FF (in 16 point units)	X/Y0 to X/Y3FF (in 16 point units)
	Link relay (B)		▪ B0 to BFFF (in 16 point units)		
	Link register (W)		▪ W0 to WFFF (in 1 point units)		
MELSECNET/ MINI, MELSECNET/ MINI-S3 Latch range setting	Number of supported modules	–	0 to 8 module(s)		
	Head I/O number		0 to 1FF0 (in 10H units)		
	Model name registration		MINI, MINI-S3		
	Transmission/ reception data		X, M, L, B, T, C, D, W, R, none (16 point units for bit devices)		
	Number of retries		0 to 32 times		
	FROM/TO response setting		Link priority; CPU priority		
	Faulty station data		Retain/ Clear		
	Faulty station detection		M, L, B, T, C, D, W, R, none (16 point units for bit devices)		
	Error No.		T, C, D, W, R		
	Number of total remote stations		0 to 64 stations		
	Sending state setting during communication error		Test message, OFF data, retention (sending data)		

4.2.2 Memory capacity setting (for main program, file register, comment, etc.)

The CPU modules has the following user memory (built-in RAM) as a standard.

- A2USHCPU-S1,A2USCPU-S1,A2ASCPU-S1, A2ASCPU-S30..... 256k bytes
- A2USCPU,A2ASCPU.....64k bytes

Parameters, T/C set value main program, MELSECNET/10 network parameters, expanded comment, file register, and comment data are stored in the user memory.

(1) Calculation of memory capacity
Determine the data types to be stored and the memory capacity with parameters before using the user memory.
Calculate the memory capacity according to Table 4.1.

Table 4.1 Memory capacity

Item		Setting unit	Memory capacity	Change into a ROM	Remark
Parameter, T/C set value		–	4k bytes (fixing)	Usable	The parameter and T/C set value occupy 4k bytes.
Main program	Sequence program	1k step	(Main sequence program capacity)×2k bytes		–
	Microcomputer program	2k bytes	(Main microcomputer program)k byte		The microcomputer program area is dedicated to the SFC.
MELSECNET/10*1, *2 network parameter		–	(Network module)×4k bytes		One network module occupies up to 4k bytes.
Expanded comment		64 points	(Number of extension comments/ 64+1)k bytes	Not usable	When the expanded comment capacity is set, the system occupies 1k byte.
File register		1k point	(Number of file register points)×2k bytes		–
Comment		64 points	((Number of comments)/64+1)k bytes		When the comment capacity is set, the system occupies 1k byte.

*1 The capacity for network parameters of MELSECNET/10 changes depending on the contents set.
The area for the network parameters shall be secured in 2k byte units based on the total of capacity for each setting.
The memory capacity of each network parameter is as follows:

Item		Memory capacity (bytes)
Internal data		30
Routing parameter		390
Transfer parameter between data links		246
Common parameter	Control station	2164/module
	Remote master station	2722 bytes
Refresh parameter		92/module
Station inherent parameter		1490/module

The network parameter capacity for MELSECNET/10 is determined from the total of the memory capacities calculated from above.

Total of the capacity	Capacity of the network parameter setting
30 to 2048 bytes	2k bytes
2049 to 4096 bytes	4k bytes
4097 to 6144 bytes	6k bytes
6145 to 8192 bytes	8k bytes
8193 to 10240 bytes	10k bytes
10241 to 12288 bytes	12k bytes
12289 to 14336 bytes	14k bytes
14337 to 16384 bytes	16k bytes

*2 If the MELSECNET(II) data link system is configured using a GPP function software package for the AnU, 2k bytes (for 1k step) are occupied as a link parameter area.

(2) Storing order in the user memory

Each data set by the parameters are stored in the order shown below:
Execute the memory protect after confirming that the write area during execution of the sequence program such as a file register is not in the range of memory protection.

(a) When the main program is made into EP-ROM

By making the main program into EP-ROM, the extension file register can be enlarged.(Applicable memory cassette A2SMCA-14KP)

1) For A2USHCPU-S1, A2ASCPU-S30

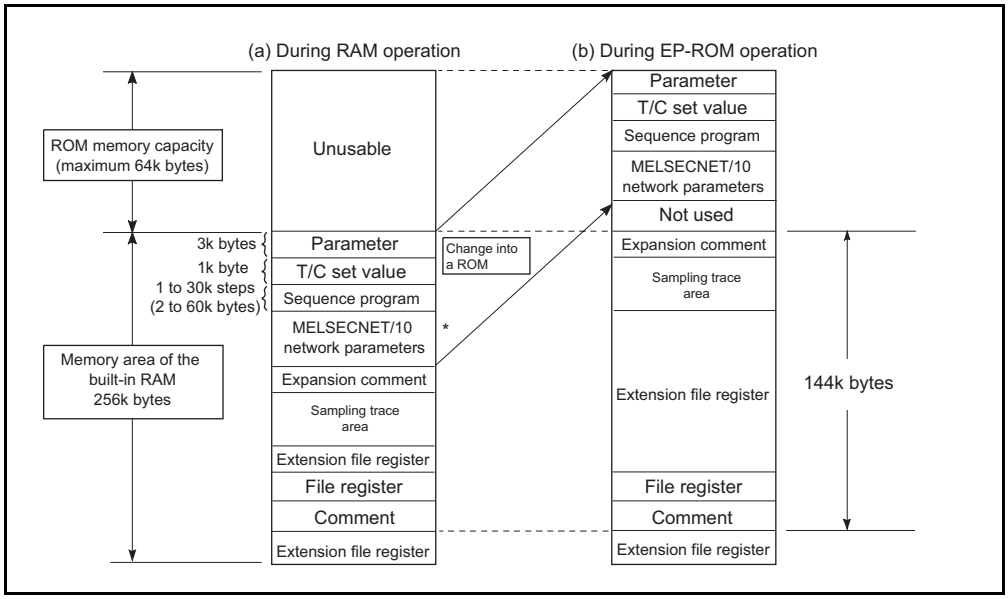

2) For A2USCPU(S1), A2ASCPU, A2ASCPU-S1

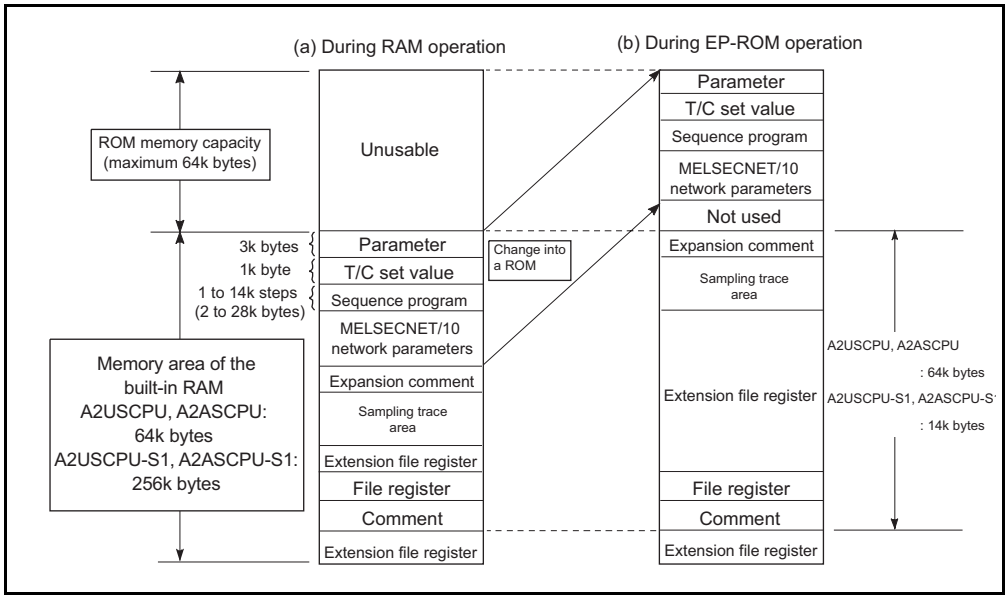

(b) When the main program is made into E^2PROM

Even when making the main program into E^2PROM, the extension file register cannot be enlarged, because the built-in RAM area (area shown in the following figure*1) will be used in the system.(Applicable memory cassette A2SNMCA-30KE)

1) For A2USHCPU-S1, A2ASCPU-S30

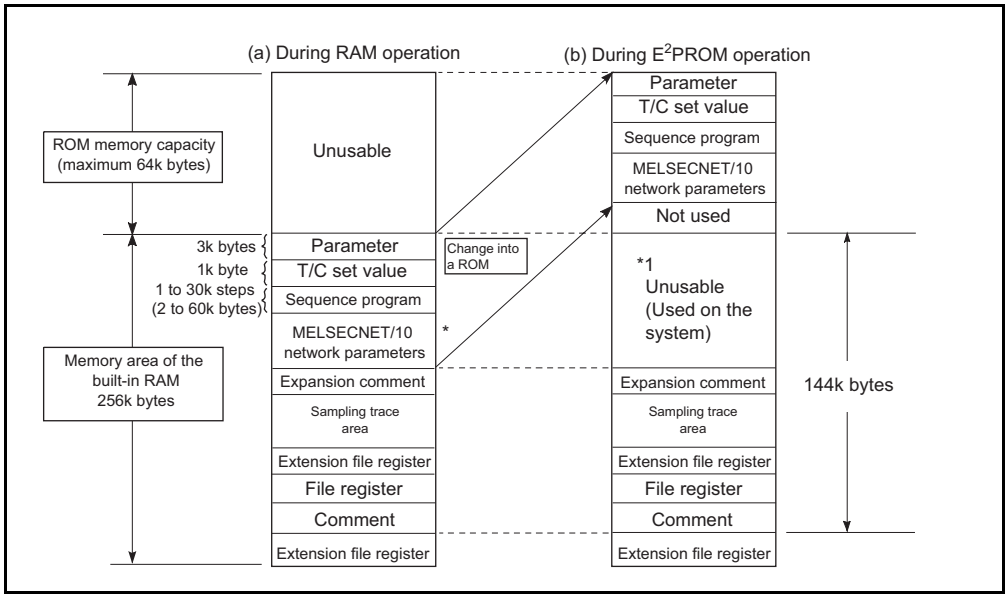

2) For A2USCPU(S1), A2ASCPU, A2ASCPU-S1

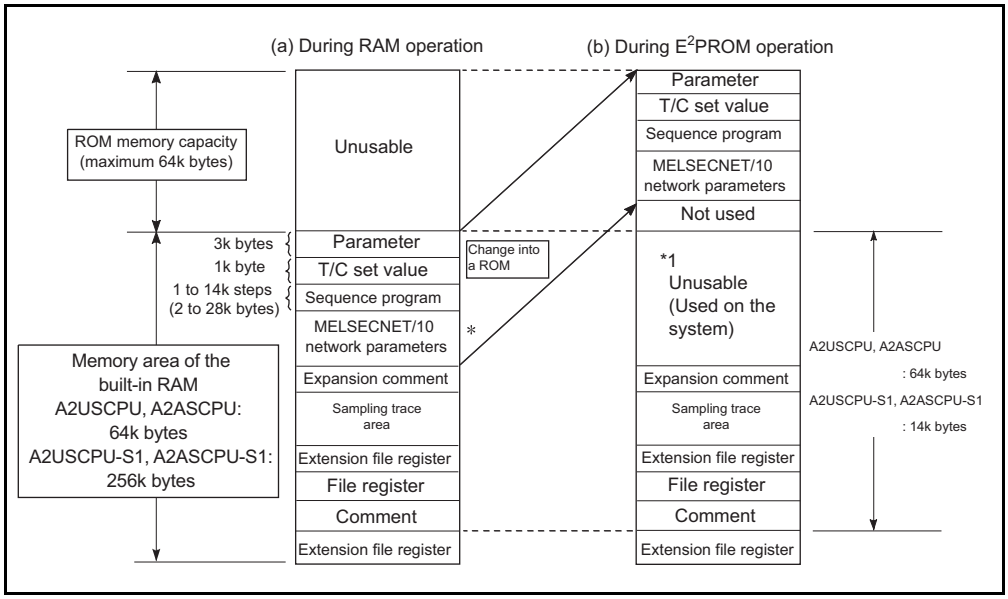

* If the MELSECNET(II) data link system is configured using a GPP function software package for the AnU, 2k bytes (for 1k step) are occupied as a link parameter area.

POINT
Note that the sequence program can use only up to 22k steps when the maximum 16k bytes are used for the MELSECNET/10 network parameters. The memory area for the sequence program for A2USHCPU-S1, A2ASCPU-S30 is the same as that for MELSECNET/10. Therefore, the remainder which is subtracted the memory area used by the MELSECNET(II) and MELSECNET/10 parameters from the max. 30k steps can be used for the sequence program.

(c) Stored address of user memory

Data address for storing to RAM memory can be calculated as follows.

Note that confirm the data destination address as follows so as not to protect the data destination switched.

1) During RAM operation

Item		Memory capacity	Head address for storing to RAM memory		Remark
			A2USHCPU-S1 A2USCPU-S1 A2ASCPU-S30 A2ASCPU-S1	A2USCPU A2ASCPU	
Parameter, T/C set value		4k bytes	0k	0k	
Main program	Sequence program	(a)*1	4k	4k	
	Microcomputer program	(b)*1	4k + (a)	4k + (a)	
MELSECNET/10 network parameter		(c)*1	4k + (a) + (b)	4k + (a) + (b)	
Expanded comment *2		(f)*1	4k + (a) + (b) + (c)	4k + (a) + (b) + (c)	
Not used area		–	4k + (a) + (b) + (c) + (f)	4k + (a) + (b) + (c) + (f)	
Extension file register *3	Block No.8	16k bytes	16k - (d) - (e)	–	Number of extension file registers: n can be determined by the rest of the memory capacity after storing parameters, T/C set values, main programs, MELSECNET/10 network parameters, file registers, comments.*4
	Block No.7 *2	16k bytes	32k - (d) - (e)	–	
	Block No.6	16k bytes	48k - (d) - (e)	–	
	Block No.5	16k bytes	64k - (d) - (e)	–	
	Block No.4	16k bytes	80k - (d) - (e)	–	
	Block No.3	16k bytes	96k - (d) - (e)	16k - (d) - (e)	
	Block No.2	16k bytes	112k - (d) - (e)	32k - (d) - (e)	
	Block No.1	16k bytes	128k - (d) - (e)	48k - (d) - (e)	
File register		(d)*1	144k - (d) - (e)	64k - (d) - (e)	
Comment		(e)*1	144k-(e)	64k-(e)	
Extension file register *3	Block No.16	16k bytes	144k	–	
	Block No.15	16k bytes	160k	–	
	Block No.14	16k bytes	176k	–	
	Block No.13	16k bytes	192k	–	
	Block No.12	16k bytes	208k	–	
	Block No.11 *2	16k bytes	224k	–	
	Block No.10	16k bytes	240k	–	

*1 Can be confirmed at GX Developer, Memory capacity of Parameter.

*2 Expanded comment can be allocated to the empty area of "RAM memory area usable for parameter range". When setting the capacity exceeded the empty area, the total capacity is allocated from block No.10 in order in the extension file register.
An area block that is stored area in the expanded comment cannot be used as an extension file register.

*3 Sampling trace data and status latch data are stored to the area of the extension file register. The stored block Nos. are specified at GX Developer, Parameter.

*4 A2USHCPU-S1,A2USCPU-S1, A2ASCPU-S30, A2ASCPU-S1
:(144k-4k-(a)-(b)-(c)-(d)-(e)-(f))/16k=n
A2USCPU, A2ASCPU :(64k-4k-(a)-(b)-(c)-(d)-(e)-(f))/16k=n

2) When operating the EP-ROM

Item		Memory capacity	Head address for storing to RAM memory		Remark
			A2USHCPU-S1 A2USCPU-S1 A2ASCPU-S30 A2ASCPU-S1	A2USCPU A2ASCPU	
Parameter, T/C set value		–	(Stored to EP-ROM)	(Stored to EP-ROM)	
Main program	Sequence program	–	(Stored to EP-ROM)	(Stored to EP-ROM)	
	Microcomputer program	–	(Stored to EP-ROM)	(Stored to EP-ROM)	
MELSECNET/10 network parameter		–	(Stored to EP-ROM)	(Stored to EP-ROM)	
Expanded comment *2		(f)*1	0k	0k	
Not used area		–	0k	0k	
Extension file register *3	Block No.8	16k bytes	16k - (d) - (e)	–	Number of extension file registers: n can be determined by the rest of the memory capacity after storing parameters, T/C set values, main programs, MELSECNET/10 network parameters, file registers, comments.*4
	Block No.7 *2	16k bytes	32k - (d) - (e)	–	
	Block No.6	16k bytes	48k - (d) - (e)	–	
	Block No.5	16k bytes	64k - (d) - (e)	–	
	Block No.4	16k bytes	80k - (d) - (e)	–	
	Block No.3	16k bytes	96k - (d) - (e)	16k - (d) - (e)	
	Block No.2	16k bytes	112k - (d) - (e)	32k - (d) - (e)	
	Block No.1	16k bytes	128k - (d) - (e)	48k - (d) - (e)	
File register		(d)*1	144k - (d) - (e)	64k - (d) - (e)	
Comment		(e)*1	144k-(e)	64k-(e)	
Extension file register *3	Block No.16	16k bytes	144k	–	
	Block No.15	16k bytes	160k	–	
	Block No.14	16k bytes	176k	–	
	Block No.13	16k bytes	192k	–	
	Block No.12	16k bytes	208k	–	
	Block No.11 *2	16k bytes	224k	–	
	Block No.10	16k bytes	240k	–	

*1 Can be confirmed at GX Developer, Memory capacity of Parameter.

*2 Expanded comment can be allocated to the empty area of "RAM memory area usable for parameter range". When setting the capacity exceeded the empty area, the total capacity is allocated from block No.10 in order in the extension file register.
An area block that is stored area in the expanded comment cannot be used as an extension file register.

*3 Sampling trace data and status latch data are stored to the area of the extension file register. The stored block Nos. are specified at GX Developer, Parameter.

*4 A2USHCPU-S1,A2USCPU-S1, A2ASCPU-S30, A2ASCPU-S1
:(144k-4k-(a)-(b)-(c)-(d)-(e)-(f))/16k=n
A2USCPU, A2ASCPU :(64k-4k-(a)-(b)-(c)-(d)-(e)-(f))/16k=n

3) When operating the E^2PROM

Item		Memory capacity	Head address for storing to RAM memory		Remark
			A2USHCPU-S1 A2USCPU-S1 A2ASCPU-S30 A2ASCPU-S1	A2USCPU A2ASCPU	
Parameter, T/C set value		4k bytes	(Stored to E^2PROM)	(Stored to E^2PROM)	Cannot be used because used in the system.
Main program	Sequence program	(a)*1	(Stored to E^2PROM)	(Stored to E^2PROM)	
	Microcomputer program	(b)*1	(Stored to E^2PROM)	(Stored to E^2PROM)	
MELSECNET/10 network parameter		(c)*1	(Stored to E^2PROM)	(Stored to E^2PROM)	
Expanded comment *2		(f)*1	4k + (a) + (b) + (c)	4k + (a) + (b) + (c)	
Not used area		–	4k + (a) + (b) + (c) + (f)	4k + (a) + (b) + (c) + (f)	
Extension file register *3	Block No.8	16k bytes	16k - (d) - (e)	–	Number of extension file registers: n can be determined by the rest of the memory capacity after storing parameters, T/C set values, main programs, MELSECNET/10 network parameters, file registers, comments.*4
	Block No.7 *2	16k bytes	32k - (d) - (e)	–	
	Block No.6	16k bytes	48k - (d) - (e)	–	
	Block No.5	16k bytes	64k - (d) - (e)	–	
	Block No.4	16k bytes	80k - (d) - (e)	–	
	Block No.3	16k bytes	96k - (d) - (e)	16k - (d) - (e)	
	Block No.2	16k bytes	112k - (d) - (e)	32k - (d) - (e)	
	Block No.1	16k bytes	128k - (d) - (e)	48k - (d) - (e)	
File register		(d)*1	144k - (d) - (e)	64k - (d) - (e)	
Comment		(e)*1	144k-(e)	64k-(e)	
Extension file register *3	Block No.16	16k bytes	144k	–	
	Block No.15	16k bytes	160k	–	
	Block No.14	16k bytes	176k	–	
	Block No.13	16k bytes	192k	–	
	Block No.12	16k bytes	208k	–	
	Block No.11 *2	16k bytes	224k	–	
	Block No.10	16k bytes	240k	–	

*1 Can be confirmed at GX Developer, Memory capacity of Parameter.

*2 Expanded comment can be allocated to the empty area of "RAM memory area usable for parameter range". When setting the capacity exceeded the empty area, the total capacity is allocated from block No.10 in order in the extension file register.
An area block that is stored area in the expanded comment cannot be used as an extension file register.

*3 Sampling trace data and status latch data are stored to the area of the extension file register. The stored block Nos. are specified at GX Developer, Parameter.

*4 A2USHCPU-S1,A2USCPU-S1, A2ASCPU-S30, A2ASCPU-S1
:(144k-4k-(a)-(b)-(c)-(d)-(e)-(f))/16k=n
A2USCPU, A2ASCPU :(64k-4k-(a)-(b)-(c)-(d)-(e)-(f))/16k=n

REMARK

When performing RAM operation as following parameter setting, calculation examples for addresses stored various data are shown.

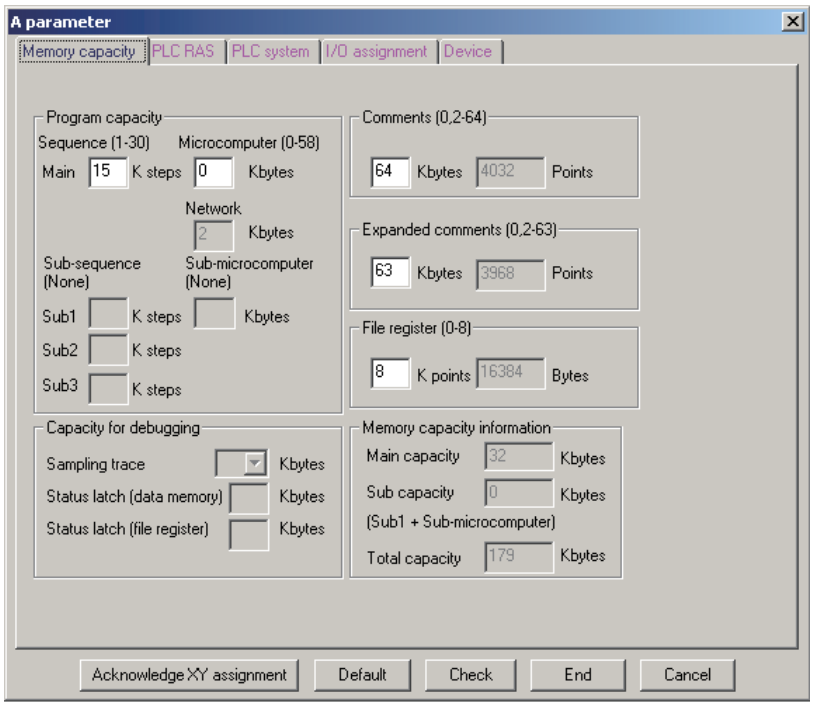

Item		Memory capacity	Head address for storing	Remark
Parameter, T/C set value		4k bytes	0k	
Main program	Sequence program	30k bytes	4k	
	Microcomputer program	0k byte	–	
MELSECNET/10 network parameter		2k bytes	34k	
Not used area		(12k)	(36k)	
Extension file register	Block No.8	16k bytes	–	
	Block No.7	16k bytes	–	Because the empty memory capacity is 12k bytes, extension file registers can be only used 1 block.
	Block No.6	16k bytes	–	
	Block No.5	16k bytes	–	
	Block No.4	16k bytes	–	
	Block No.3	16k bytes	–	
	Block No.2	16k bytes	–	
	Block No.1	16k bytes	48k	
File register		(d)*1	64k	
Comment		(e)*1	80k	
Extension file register	Block No.16	16k bytes	144k	
	Block No.15	16k bytes	160k	
	Block No.14	16k bytes	176k	
Expanded comment	Block No.13	16k bytes	192k	Expanded comments are stored to No.10 through No.13 due to short of block No.1 to 8 area memory capacity.
	Block No.12	16k bytes	208k	
	Block No.11	16k bytes	224k	
	Block No.10	16k bytes	240k	

4.2.3 Setting ranges of timer and counter

(1) Timer setting range

(a) Default values of the timer setting ranges are as follows:

Timer points :256 points
100ms timer :T0 to T199
10ms timer :T200 to T255
Retentive timer :None

(b) When timer-use points are set to 257 or more, the default values will be as follows:

100ms timer :T0 to T199
10ms timer :T200 to T255
100ms timer :T256 to T2047

(c) The timer type can be arbitrarily set in serial numbers, with T0 to T255 in 8 point units, and T256 to T2047 in 16 point units.
By setting the timer points actually to be used, the timer processing time subsequent to the END instruction can be shortened.

(d) Timer setting values are as follows:

T0 to T255 : constant or word device (D)
T256 to T2047 : word device (D, W, R)
(Allocate a storage device for the set value by setting parameters.)

(2) Counter setting range

(a) Default values of counter setting ranges are as follows:

Counter points :256 points
Normal counter :C0 to C255
Interrupt counter :None

(b) When the counter-use points are set to 257 points or more, the default values will become as follows:

Normal counter :C0 to C255
Normal counter :C256 to C1024

(c) A counter which can be setup as an interrupt counter must be in the range C244 to C255 only, and any counters outside the range cannot be set up.
The setup is made with parameters in C224 to C255 by one point for the interrupt counter.
Any counter in the range C224 to C255 which is not set up as an interrupt counter can be used as a normal counter.

The interrupt counters in C224 to C255 are allocated to the interrupt pointers I0 to I31 as shown below, and count the occurrences of interrupts by those of I0 to I31.

Interrupt pointer	Interrupt counter	Interrupt pointer	Interrupt counter	Interrupt pointer	Interrupt counter	Interrupt pointer	Interrupt counter
I0	C224	I8	C232	I16	C240	I24	C248
I1	C225	I9	C233	I17	C241	I25	C249
I2	C226	I10	C234	I18	C244	I26	C250
I3	C227	I11	C235	I19	C243	I27	C251
I4	C228	I12	C236	I20	C244	I28	C252
I5	C229	I13	C237	I21	C245	I29	C253
I6	C230	I14	C238	I22	C246	I30	C254
I7	C231	I15	C239	I23	C247	I31	C255

(d) The counter-use points can be set arbitrarily by 16 points using the serial numbers.
By setting the counter which points to the number actually used, the counter processing time subsequent to the END instruction can be shortened.

(e) The counter set values are as follows:
C0 to C255 :constant or word device (D)
C256 to C1023 :word device (D, W, R)
(Allocate a storage device for the set value by setting parameters.)

POINT

When the timer-use points are set to 257 points or more or the counter-use points are set to 257 points or more, the set value storage devices (D, W, R) specified at the time of timer/counter use point setup are automatically set in the serial numbers.
<Example>
When the timer-use points are set to 512 points and the set value storage device is set to D1000, D equivalent to 256 points (D1000 to D1255) in T256 to T511 becomes the devices for the set values using the continuous numbers.

4.2.4 I/O devices

A2USHCPU-S1, A2USCPU(S1), A2ASCPU(S1/S30) has 8192 I/O device points (X/Y0 to X/Y1FFF) each for input (X) and output (Y).
There are actual I/O devices and remote I/O devices in this I/O range.

(1) Actual I/O device
This is the device range where an I/O module or special function module can be installed to the main base unit/extension base unit and controlled.

A2USHCPU-S1 ..... 1024 points(X/Y0 to X/Y3FF)
A2USCPU ..... 512 points (X/Y0 to X/Y1FF)
A2USCPU-S1 ..... 1024 points(X/Y0 to X/Y3FF)
A2ASCPU ..... 512 points (X/Y0 to X/Y1FF)
A2ASCPU-S1 ..... 1024 points(X/Y0 to X/Y3FF)
A2ASCPU-S30 ..... 1024 points(X/Y0 to X/Y3FF)

(2) Remote I/O device
The remote I/O devices, following the actual I/O devices or later, can be used for the following objectives:
(a) Allocate to a remote I/O station in the MELSECNET data link system.
(b) Allocate to a remote I/O station in the MELSECNET/10 network system.
(c) Allocate to the reception data storage device or transmission data storage device in the MELSECNET/MINI-S3's auto refresh setting.
(d) Use as the substitute to an internal relay (Substitute only for output device)

4.2.5 I/O assignment of special function modules

By registering the model name of the following special function modules upon the I/O assignment from the peripheral devices, the dedicated instructions for special function modules can be used.

Model name of special function module	Setting for model name registration
AD61	AD61
AD61-S1	AD61S1
AD59	AD59
AD59-S1	AD59S1
AJ71C24	AJ71C24
AJ71C24-S3	AJ71C24S3
AJ71C24-S6	AJ71C24S6
AJ71C24-S8	AJ71C24S8
AJ71UC24	AJ71UC24
AJ71C21	AJ71C21
AJ71C21-S1	AJ71C21S1
AJ71PT32-S3	PT32S3
AD57	AD57
AD57-S1	AD57S1
AD58	AD58
A1SJ71UC24-R2	A1SJ71UC24
A1SJ71UC24-R4	
A1SJ71UC24-PRF	
A1SJ71PT32-S3	A1SPT32S3

4.2.6 MELSECNET/MINI-S3 auto refresh processing

By setting link information, I/O storage device, etc. of the MELSECNET/MINI-S3 to the parameters, the module automatically communicates with the buffer memory area for the batch refresh send/received data of the A1SJ71PT32-S3/AJ71PT32-S3 master module (abbreviated as the master module hereafter).

Sequence programs can be created using the I/O devices allocated to send/received by the auto refresh setting. (The FROM/TO instructions are not required.)

POINT

(1) Since up to 8 master modules can be set for auto refresh by the parameter, auto refresh is possible for up to 8 modules.
When 9 or more modules are desired, use the FROM/TO instruction in the sequence program from the 9th module.

(2) Since auto refresh is not possible with send/received data for the separate refresh I/O modules and for the remote terminal units No.1 to No.14, use them by the FROM/TO instructions.
However, the remote terminal units shown below are subject of auto refresh in the limited area:
- AJ35PTF-R2 RS-232C interface module
- AJ35PT-OPB-M1-S3 mount-type tool box
- AJ35PT-OPB-P1-S3 portable type tool box

(3) For the master modules set up for auto refresh, since the CPU module automatically turns ON the link communication start signal Y(n+18) or Y(n+28), it is not necessary to turn it on from the sequence program.

(4) Auto refresh of I/O data is performed by batch after the CPU module executes the END instruction. (Auto refresh processing is performed when the CPU module is in the RUN/PAUSE/STEP-RUN status.)

(5) The master module may perform the processing while the link communication start signal Y(n+28) is OFF depending on the remote terminal units connected.
For instance, if the AJ35PTF-R2 RS-232C interface unit is used without protocol, it is necessary to write parameters to the parameter area (buffer memory address 860 to 929) while the link communication start signal is OFF.
Since the link communication start signal becomes ON after the CPU module enters the RUN status and one scan is performed, write the parameters during the first 1 scan.

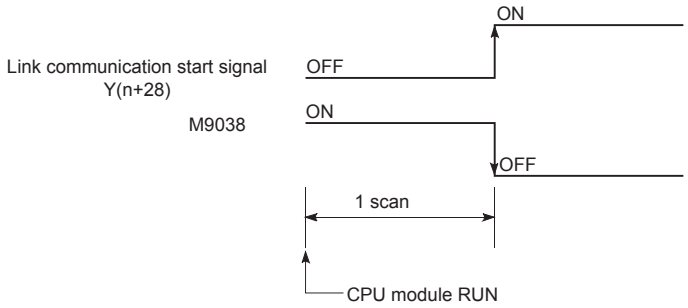

(1) Parameter setting items, setting ranges and contents of auto refresh, as well as the buffer memory address of the master module which is used for exchanging data with the CPU modules are shown below.
Set the parameters for the number of use of the A1SJ71PT32-S3/AJ71PT32-S3 master modules.

I/O signal from the master module	Buffer memory address of the master module	Item	Setting range	Description
–	–	Number of master modules	1 to 8 module(s)	• Sets the total number of use of the master modules.
–	–	Head I/O No.	Number of I/O points of CPU module	• Sets the head I/O number where the master module is installed.
–	–	Model classification of MINI/MINI-S3	• MINI or MINI-S3	• MINI ..... In I/O mode (occupies 32 points) • MINI-S3 ..... In expansion mode (occupies 48 points)
–	0	Total number of remote I/O stations *2	0 to 64 station(s)	• Set only when MINI is set. • In MINI-S3, since the number of master module's initial ROMs becomes valid, the setting is not necessary. (When the setting is executed, ignore it).
–	110 to 141	Storage device for received data	• X • M, L, B, T, C, D, W, R, none (Bit device: multiples of 16)	• Sets the devices to store the received/send data for batch refresh. • Specify the head number of the device. • Occupies a part of the device area as the auto refresh area from the head of the device for the number of stations. (When setting the total number of remote I/O stations to 64, occupies 8 points/station × 64 stations=512 points: bit device.)*2 • Use of X/Y remote I/O range is recommended for devices.
–	10 to 41	Send data storage device	• Y • M, L, B, T, C, D, W, R, none (Bit device: multiples of 16)	
–	1	Number of retries	0 to 32 times	• Sets the number of retries upon the communication errors occurrence. • Error is not output when the communication is restored within the number of the retries set.

(To the next page)

(Continued)

I/O signal from the master module	Buffer memory address of the master module	Item	Setting range	Description
Y(n+1A)*1	–	FROM/TO response specification	Link priority, CPU priority (Priority selection of access to the master module buffer memory)	(1) Link priority ..... Link access by MINI-S3 has the priority. During the link access, FROM/TO is caused to wait. • Possible to read out the received data refreshed at the same timing. • The maximum wait time (0.3ms + 0.2ms × number of separate refresh stations) for the FROM/TO instruction may be generated. (2) CPU priority ..... Access by FROM/TO instruction of CPU has the priority. Even during the link access, it interrupts and accesses. • Depending on the timing, received data in the midst of I/O refresh may be read. • No wait time for FROM/TO instruction.
Y(n+1B)*1	–	Data clear specification for communication faulty station	Retention, clear (received data)	• Retention ..... Retains the received data for batch and separate refresh. • Clear ..... Sets all points to OFF.
–	100 to 103 195	Faulty station detection	M, L, B, T, C, D, W, R, none (Bit device: multiples of 16)	• Sets the head device to store the faulty stations detected data. • MINI ..... occupies 4 words; MINI-S3: occupies 5 words.
–	107 196 to 209	Error No.	T, C, D, W, R	• Sets the head device to store the error code at the error occurrence. • MINI ..... occupies 1 word; MINI-S3 ..... occupies (1+ number of remote terminal units) words.
–	4	Line error check setting (Line error)	• Test message sending • OFF data sending • Immediate data transmission before line errors	• Sets data sending method for verification of faulty area when the line errors occur.

*1 "n" is determined by the installation location of the master modules.
*2 When the total number of remote I/O station is odd, add 1 to the station number to obtain the occupied storage devices.

(2) Setting of the send/received data storage devices is explained using the system example shown below.
<Example> When the device X/Y400 and later are used as the remote I/O stations:

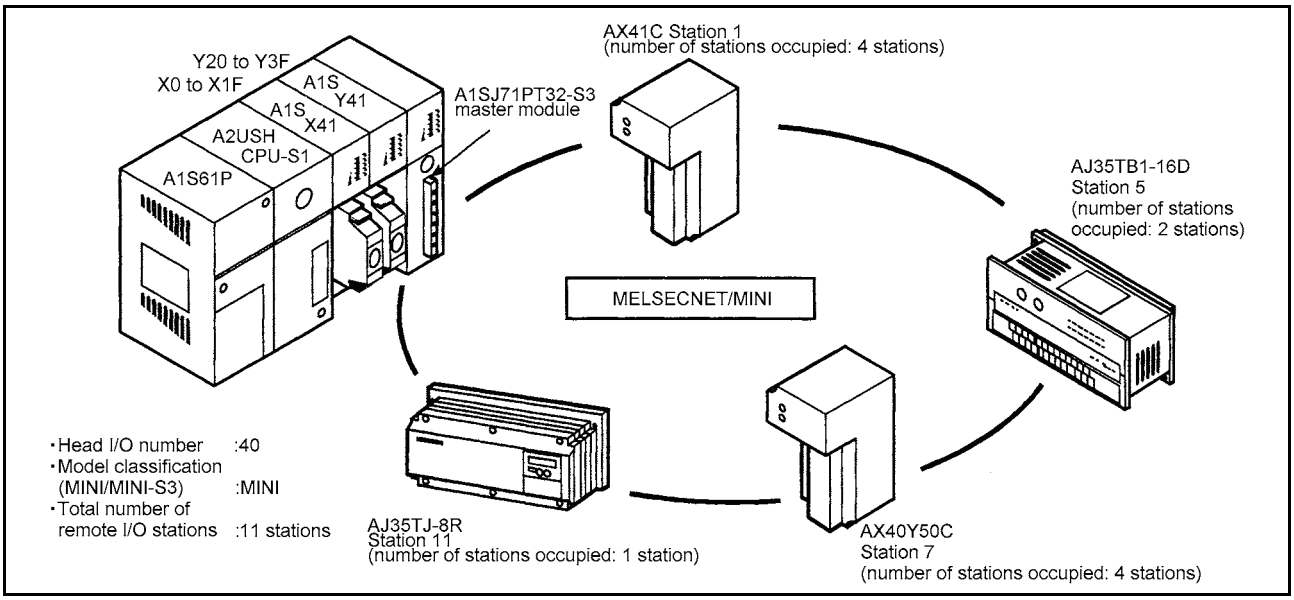

Sample parameter setting of the GPP function software package for the above system configuration is shown below:

Number of modules [1] (0-8)

I/O No.	0040
Model	MINI
Number of stations	11
Received	X0400
Send	Y0400
Retries	5
Response	CPU
Data clear	Clear
Detection	
Error number	
Error	Retain

The storage devices for the send/received data for the present system example are as follows:

(a) Storage device for received data

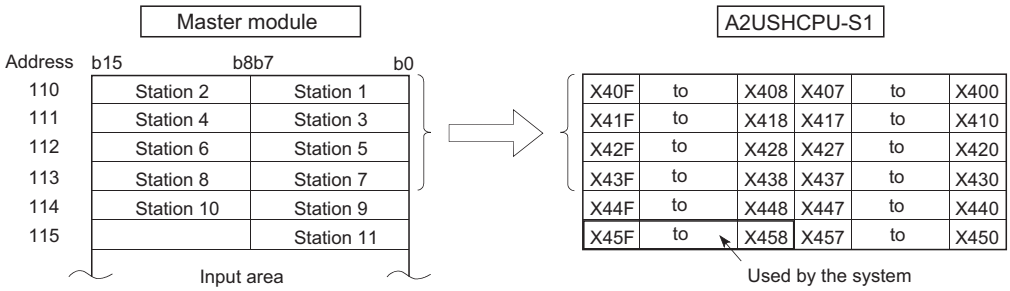

1) Set the device number (X400) for b0 of the station 1 as a received data storage device.
2) The received data storage device occupies from X400 to X45F.
For the present system example, since the total number of stations is odd, it is occupied for one extra station.

3) The device numbers of input modules connected are as follows:

Stations 1 to 4 AX41C → X400 to X41F
Stations 5 to 6 AJ35TB-16D → X420 to X42F
Stations 7 to 8 AX40Y50C → X430 to X43F

With respect to X440 to X45F, they are simultaneously refreshed, and set to OFF at any time.
Do not use X440 to X45F in the sequence program.

(b) Send data storage device

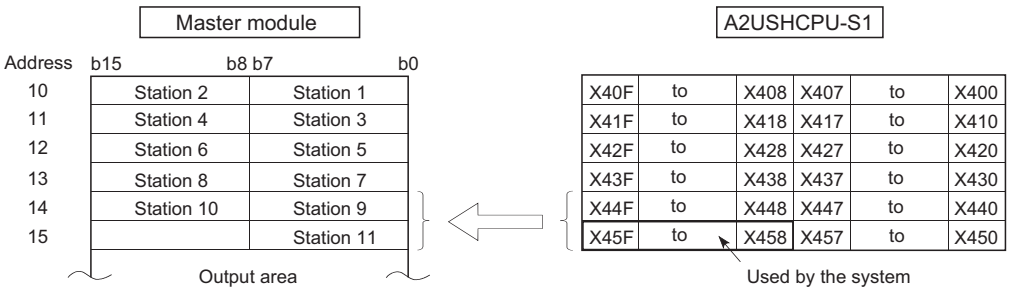

1) Set the device number (Y400) for b0 of the station 1 as a send data storage device.
2) The send data storage device occupies from Y400 to Y45F.
For the present system example, since the total number of stations is odd, it is occupied for one extra station.
3) The device numbers of output modules connected are as follows:

Stations 9 to 10 AX40Y50C → Y440 to Y44F
Station 11 AJ35TJ-8R → Y450 to Y457

With respect to Y400 to Y43F and Y458 to Y44F, they are simultaneously refreshed, but are not output.

POINT

(1) Set the send and received data storage devices so that device numbers are not overlapped.
When the received data storage device is set to B0 in the system configuration example, it occupies B0 to B5F as the device range.
Set the send data storage device to B60 or later.
When the send data storage device is set to B60, the device range will be B60 to BBF.

(2) If a bit device is specified as the send/received data storage device, the device number set must be a multiple of 16.

<Example> (X0, X10, ... X100, ...
M0, M16, ... M256, ...
B0, B10, ... B100, ...)

(3) Device range used is (8 points) × (Number of stations).
When the number of stations is an odd number, extra 8 points are necessary.

4.3 Function List

Various functions of the CPU modules are explained below.

Function (application)	Description	Overview of setting and operation
Constant scan •Program execution at constant intervals •Simplified positioning	• Makes the processing time for a single scan in the sequence program constant. • Set the processing time within the range of 10ms to 190ms by 10ms.	• Write to the special register D9020 by the sequence program
Latch (power failure compensation) Continuous control by data retention on power failure	• When the power supply failure of 20ms or the longer/ CPU reset/power supply off occur, data contents of the devices for which latches have been set up in advance are retained. • Latch-enabled devices: L, B, T, C, D, W • Latched data are stored in the CPU main module and backed up by the batteries of the CPU main module.	• Latch device and latch range are specified by setting of the peripheral device parameters.
Auto refresh of MELSECNET/MINI-S3 Simplification of sequence program	• Performs I/O auto refresh communication with send/ received data area for the batch refresh of AJ71PT32-S3/ A1SJ71PT32-S3 up to 8 modules. • Auto refresh is executed in a batch after END processing. • The FROM/TO instruction for I/O in the sequence program becomes unnecessary. Programming is possible with I/O devices allocated directly by each module.	• Performed by setting the auto refresh parameter of a peripheral device. (Refer to Section 4.2.6)
Remote RUN/STOP When performing RUN/STOP control from outside the PC	• When PLC CPU is in RUN (the RUN/STOP key switch is set to RUN), performs the PLC's STOP/RUN from outside the PLC (external input, peripheral devices, computer) with a remote control.	• When performed with the external input (X), the parameter is set with a peripheral device. • When performed by a peripheral device, perform in the PLC test operation. • When performed via the computer link module, perform using the dedicated commands.
PAUSE •When stopping operation of CPU while retaining the output (Y) •When performing RUN/PAUSE control from outside the PC	• Stops the operation processing of PLC CPU while retaining the ON/OFF of all the outputs (Y). (When the operation is stopped by STOP, all the outputs (Y) are set to OFF.) • When PLC CPU is in RUN (the RUN/STOP key switch is set to RUN), performs the PLC's STOP/RUN from outside the PLC CPU (external input, peripheral devices, computer) with a remote control.	• Performed by the peripheral device in the PLC test operation. • When performed with the external input (X), perform the parameter setting with the peripheral device, set the special relay M9040 to ON with the sequence program, then perform.
Status latch Carries out operation check and failure factor check on each device when debugging or a failure condition is met.	• With respect to the devices to which status latches are set up, when the status latch conditions are met, the data contents of the devices are stored in the extension file register for the status latch area in the CPU main module. (the data stored are cleared by the latch clear operation) • The criteria for the satisfied condition can be selected from when the SLT instruction is executed by the sequence program or when the device value matches the set condition.	• Using the peripheral devices, set the device to which the status latch is performed and the extension file register where the data will be stored. • Using the peripheral devices, monitor the status latch data.

(To the next page)

(Continued)

Function (application)	Description	Overview of setting and operation
Sampling trace [Performs chronological checking on the behavior status of devices set up when debugging or an abnormal behavior is detected.]	• With respect to a device for which the sampling trace is set up, the operating condition of the device is sampled for the number of times specified per scan or per period, and the results are stored in the extension file register for the sampling trace of the CPU main module. (the data stored are cleared by the latch clear operation) • Sampling trace is performed by the STRA instruction in the sequence program.	• Using the peripheral devices, set the device to which the status latch is performed and the extension file register where the data will be stored. • Using the peripheral devices, monitor the result of the sampling trace.
Step operation [Checks conditions of program execution and behavior during debugging, etc.]	• Executes operations of the sequence program with one of the conditions (1) to (5) given below, then stops. (1) Executes by each instruction. (2) Executes by each circuit block. (3) Executes by the step intervals and the number of loops. (4) Executes by the loop count and break points. (5) Executes when the device values concur.	• Selects a step operation condition for the peripheral device and executes.
Clock [Program control by clock data/ external display of clock data]	• Executes operation of the clock with the built-in CPU module. • Clock data: year, month, day , hour, minute, second, day of the week • When the clock data read request (M9028) is ON, the clock data are read out and stored in D9025 to D9028 by the clock element after the END processing of the sequence operation. • Executes operation of the clock with the built-in CPU main module.	• Sets data for D9025 to D9028 by a peripheral device, turns M9025 ON, then write to the clock element. • Writes to the clock element by the sequence program. (Dedicated instructions can be used.)
Priority order of LED indication [Changing priority order of display/canceling display]	• For ERROR LED indication except for operation stop, changing order of indication/canceling display are executed.	• Writes data as to whether change order/cancel indication to D9038 or D9039 by the sequence program.
Self-diagnostics function [•An abnormal behavior of the CPU module •Preventive maintenance]	• When an error that matches one of the self-diagnosis items is generated at the CPU module power on or during RUN, it prevents malfunctions by stopping the CPU module operation and indicating the error. • Stores the error codes corresponding to the self-diagnostics item.	• There are some self-diagnostics items with which the operation can be continued or stopped by the setting of peripheral device parameters. • Reads out the error codes with the peripheral device and performs troubleshooting. (Refer to Section 4.1.4)

4.4 Handling Precautions

Precautions when handling the CPU module from unpacking to installation are described below.

⚠ CAUTION

- Use the PLC under the environment specified in the user's manual.
  Otherwise, it may cause electric shocks, fires, malfunctions, product deterioration or damage.
- Insert the module fixing projection into the fixing hole in the base unit and then tighten the module screw within the specified torque.
  When no screw is tightened, even if the module is installed correctly, it may cause malfunctiuons, a failure or a drop of the module.
  If too tight, it may damage the screw and/or the module, resulting in a drop of the module, a short circuit or malfunctions.
- Connect the extension cable to the connector of the base unit or module.
  Check the cable for incomplete connection after connecting it.
  Poor electrical contact may cause incorrect inputs and/or outputs.
- Insert the memory cassette and fully press it to the memory cassette connector.
  Check for incomplete connection after installing it.
  Poor electrical contact may cause malfunctions.
- Be sure to shut off all phases of the external power supply used by the system before mounting or removing the module.
  Failure to do so may damage the module.
- Do not directly touch the conductive part or electronic components of the module.
  Doing so may cause malfunctions or a failure of the module.

(1) Do not drop or allow any impact to the modules case, memory cassette, terminal block connector, or pin connector.

(2) Do not remove the module printed wiring board from the case. Otherwise, a malfunction may occur.

(3) Use caution to prevent foreign matter, such as wire chips, falling into the module during wiring.
If foreign matter enters the module, remove it.

(4) Tighten the module mounting screws and terminal block screws within the tightening torque range specified shown the table below.

Screw position	Tightening torque range
Module mounting screw (M4 screw)	78 to 118N・cm
I/O module (M3.5 screw)	59 to 88N・cm
Power supply module terminal screws (M3.5 screw)	59 to 88N・cm

4.5 Part Names

Parts names of the A2USHCPU-S1, A2USCPU(S1),A2ASCPU(S1/S30) and the switch setting for using the CPU modules are explained following:

4.5.1 Parts names of the A2USHCPU-S1, A2USCPU, A2USCPU-S1, A2ASCPU, A2ASCPU-S1, A2ASCPU-S30

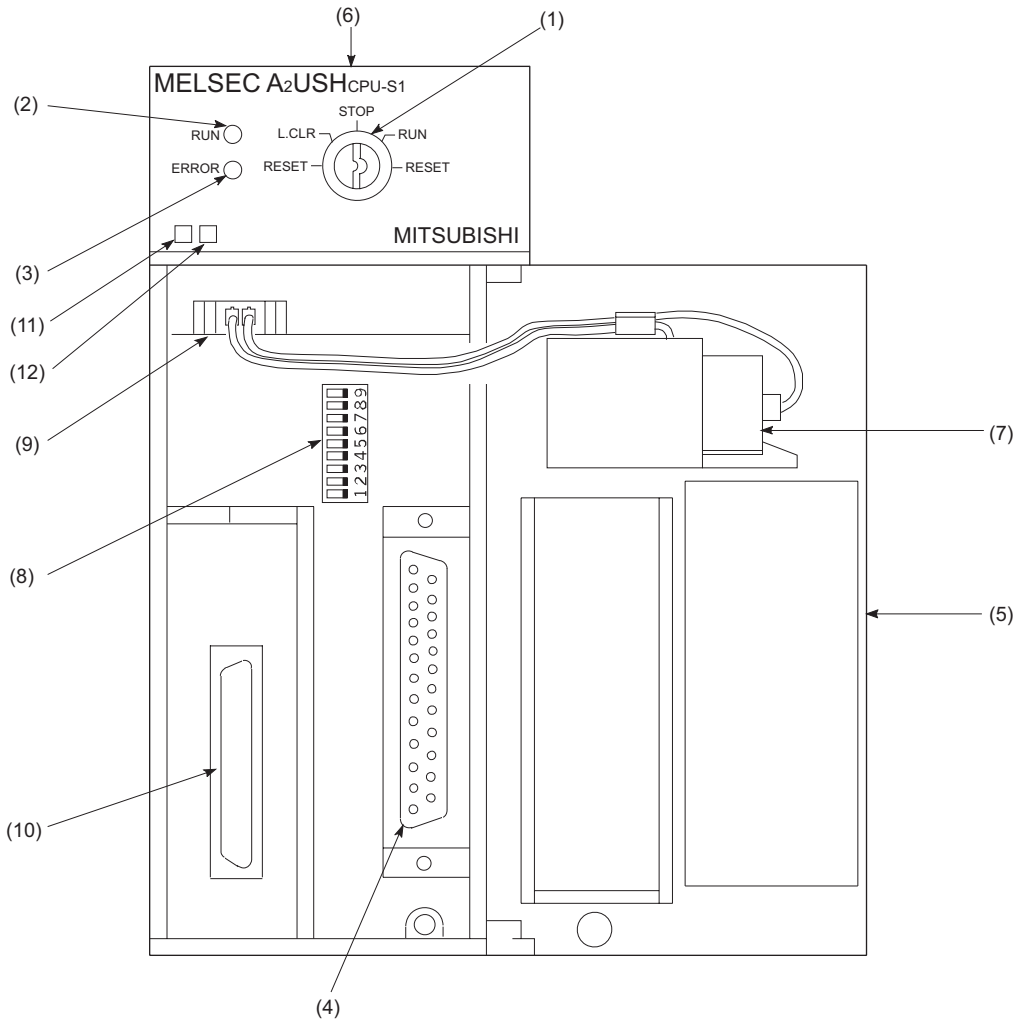

No.	Name	Description
(1)	RUN→STOP key switch	• RUN/STOP: Used to start/stop sequence program execution. • RESET: Resets the hardware. Performs the reset and initialization of the operation at the operation error occurrence. • L.CLR (LATCH CLEAR): Clears the data in the latch area (to OFF or 0) set by parameters. (With LATCH CLEAR, data in area other than the latch area is also cleared.) For the operation method of the latch clear, refer to Section 4.5.3.

No.	Name	Description
(2)	"RUN" LED	• ON: RUN/STOP key switch is in the "RUN" position, and the sequence program operation is being executed. (In case of an error which continues the operation of sequence program occurs (refer to Section 11.3), the LED remains ON.) • OFF: The "RUN" LED turns off in the following cases: • The RUN/STOP switch is set to "STOP". • Remote STOP is being performed. • Flickering: • Remote PAUSE is being performed. The "RUN" LED flickers in the following cases: • An error which causes operation of the sequence program to stop has been detected by self-diagnostics. During latch clear operation
(3)	"ERROR" LED	• ON: An error has been detected by self-diagnostics. (When an error which has been set to LED OFF in the priority order setting of the LED indication is detected, the LED remains OFF.) • OFF: When failure of the system or target device is detected by normal or CHK instruction. • Flickering: Annunciator (F) is turned on in the sequence program.
(4)	RS-422 connector	• Connector to write/read, monitor and test the main program with peripheral device. • Cover it with a lid when no peripheral device is to be connected.
(5)	Cover	• Protective cover for printed-circuit board of CPU module, memory cassette, RS-422 connector, battery, etc. • Open the cover to perform the following operations: ▪ Installation and removal of the memory cassette ▪ Setting DIP switches ▪ Connecting the battery to the connector ▪ Battery replacement
(6)	Module mounting screws	• Used to fix a module to the base unit.
(7)	Battery	• For the retention of data for program, latch range devices and file registers (for installation and removal of battery, refer to Section 7.2)
(8)	Dip switch	• The switch to set whether memory protect is enabled or not, when built in RAM is used. (Refer to Section 4.5.2 for details of the setting.)
(9)	Battery connector	• For the connection with the connector on the battery side.
(10)	Memory cassette installing connector	• Connector to install a memory cassette (It automatically enters into ROM operation when a memory cassette is installed.)
(11)	Hardware version	• Hardware version seal of CPU module
(12)	Software version	• Software version seal of CPU module

4.5.2 Settings for memory protect switch

Memory write protect switch is for prevent a program from overwriting and deletion by an operation of the peripheral device.
It is used to prevent overwriting and deletion of a program after the program is created.
To modify the ROM memory, cancel the memory write protect (OFF).
Upon shipment, the memory write protect is set to OFF (SW-1 to 9 OFF)

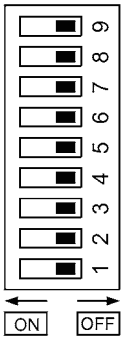

Range of memory protection (k bytes)	Setting Switch	
	A2USHCPU-S1 A2USCPU-S1 A2ASCPU-S30 A2ASCPU-S1	A2USCPU A2ASCPU
0 to 16	ON 1	ON 1
16 to 32	ON 2	ON 2
32 to 48	ON 3	ON 3
48 to 64	ON 4	ON 4
64 to 80	ON 5	Unused
80 to 96	ON 6	Unused
96 to 112	ON 7	Unused
112 to 144	ON 8	Unused
144 to 256	ON 9	Unused

POINT

(1) When the memory protect is used, refer to the address (step number) of each memory area (sequence program, comment, sampling trace, status latch and file register) to set protection. (Refer to Section 4.2.2)
(2) When sampling trace or status latch is executed, do not apply the memory protect to the data storage area.
If the protection is applied, the execution results cannot be stored in the memory.

REMARK

When A2SMCA-14KE or A2SNMCA-30KE is used, memory protect is possible with the memory protect setting pins on the main unit of the A2SNMCA-30KE. Refer to Section 7.1.4.

4.5.3 Latch clear operation

When performing latch clear by RUN/STOP key switch, follow the procedures below.
When performing latch clear, devices outside the latch range and error information by self-diagnostics of CPU module (information on the newest error and the past 15 errors) are also cleared.

(1) Switch the RUN/STOP key switch a few times (three or four times) from "STOP" to "L.CLR", and then "RUN" LED turns flicker at high speed (about 0.2s ON, 0.2s OFF). If the "RUN" LED turns flicker at high speed, a latch clear is ready.

(2) After the "RUN" LED flickers at high speed, switch the RUN/STOP key switch from "STOP" to "L.CLR" again, and then the latch clear is all prepared and "RUN" LED turns off.
In the case of cancelling the latch clear operation halfway, switch the RUN/STOP key switch to "RUN" to lead the CPU module to RUN status, or switch to "RESET" to lead it to reset status.

REMARK

The latch clear can also be performed by the operation of GPP function.
For instance, latch clear by A6GPP can be performed by "Device memory all clear" of the PLC mode test function.
For the operation method, refer to the operating manual for GPP functions.

5 POWER SUPPLY MODULE

5.1 Specifications

Specifications of power supply modules are shown below.

Table 5.1 Power supply module specifications

Item		Performance specifications		
		A1S61PN	A1S62PN	A1S63P
Base mounting position		Power supply module installing slot		
Input power supply		100 to 240VAC $^{+10\%}_{-15\%}$ (85 to 264VAC)		24VDC $^{+30\%}_{-35\%}$ (15.6 to 31.2VDC)
Input frequency		50/60Hz±5%		–
Input voltage distortion		Within 5% (See Section 8.8)		–
Max. input apparent power		105VA		41W
Inrush current		20A 8ms or lower*4		81A 1ms or lower
Rated output current	5VDC	5A	3A	5A
	24VDC	–	0.6A	–
Overcurrent protection*1	5VDC	5.5A or higher	3.3A or higher	5.5A or higher
	24VDC	–	0.66A or higher	–
Overvoltage protection*2	5VDC	5.5 to 6.5V		
	24VDC	–		
Efficiency		65% or higher		
Allowable momentary power failure period*3		20ms or lower		1ms or lower (24VDC or higher)
Dielectric withstand voltage	Between primary and 5VDC	AC across input/LG and output/FG, 2,830VAC rms/3 cycle (elevation 2,000m (6562ft.))		500VAC
	Between primary and 24VDC			–
Insulation resistance		AC across input/LG and output/FG 10MΩ or higher, measures with a 500VDC insulation resistance tester		
Noise durability		• Noise voltage 1,500 Vp-p, Nioise width 1μs, Noise frequency 25 to 60Hz (noise simulator condition) • Noise voltage IEC801-4, 2kV		Noise voltage 500Vp-p, Noise width 1μs, Noise frequency 25 to 60 Hz (noise simulator condition)
Operation indication		LED indication (ON for 5VCDC output)		
Fuse		Built in (User cannot change.)		
Terminal screw size		M3.5×7		
Applicable wire size		0.75 to 2mm^2		
Applicable solderless terminal		RAV1.25 to 3.5, RAV2 to 3.5		
Applicable tightening torque		59 to 88N・cm		

Item	Performance specifications		
	A1S61PN	A1S62PN	A1S63P
External dimensions	130mm (5.12inch)×55mm (2.17inch)×93.6mm (3.69inch)		
Weight	0.60kg	0.60kg	0.50kg

POINT

*1 Overcurrent protection

The overcurrent proctection device shuts off the 5VDC and/or 24VDC circuit(s) and stops the system if the current exceeding the specified value flows in the circuit(s).
As this results in voltage drop, the power supply module LED turns OFF or is dimly ON.
After that, eliminate the causes of overcurrent, e.g., insufficient current capacity and short-circuit, and then start the system.
When the current value has reached the normal value, the initial start-up of the system will be performed.

*2 Overvoltage protection

The overvoltage protection shuts off the 5VDC circuit and stops the system if the overvoltage of 5.5 to 6.5V is applied to the circuit.
This results in the power supply module LED turning OFF.
When restarting the system, power OFF and ON the input power supply, and the initial start-up of the system will be performed. If the system is not booted and the LED remains off, this means that the power supply module has to be replaced.

*3 Allowable momentary power failure period

The PLC CPU allowable momentary power failure period varies with the power supply module used.
In case of the A1S63P power supply module, the allowable momentary power failure period is defined as the time from when the primary side of the stabilized power supply for supplying 24VDC to the A1S63P is turned OFF until when the voltage (secondary side) has dropped from 24VDC to the specified voltage (15.6VDC) or less.

*4 Inrush current

If the power supply module is re-powered ON right after powered OFF (within 5seconds), the inrush current exceeding the specified value (2ms or less) may be generated. Therefore, make sure to re-power ON the module 5seconds after power off.
When selecting a fuse or breaker for external circuit, consider the above point as well as blown and detection characteristics.

5.1.1 Power supply module selection

Power supply module is selected based on to the total current consumption of the I/O module, special function module and peripheral devices to which power is supplied by the subject power supply module. When extension base unit A1S52B(S1), A1S55B(S1), A1S58B(S1), A52B, A55B, A58B is used, take into consideration that the power to the module is supplied by the power supply module of the main base.
For 5VDC current consumption of I/O modules, special function modules and peripheral devices, refer to Section 2.3.

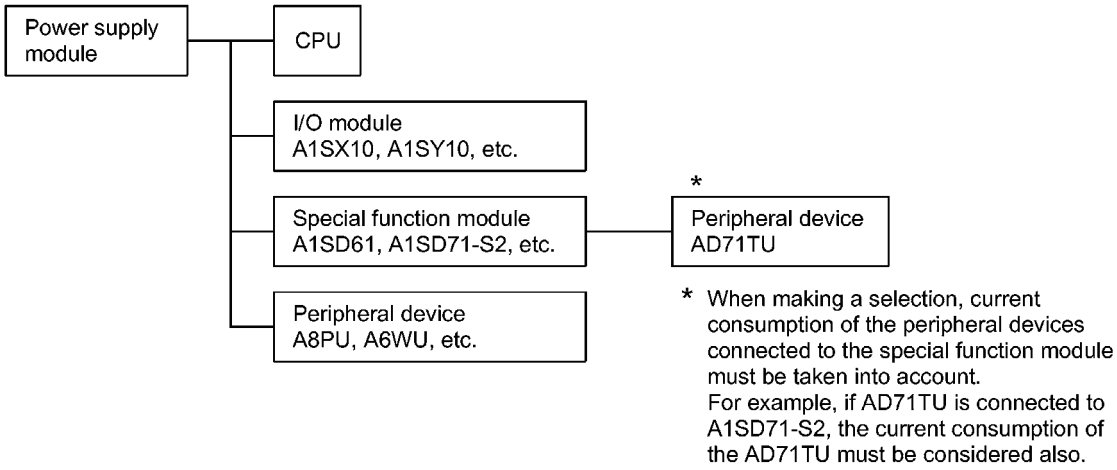

(1) Power supply module selection when extension base unit A1S52B(S1), A1S55B(S1), A1S58B(S1), A52B, A55B, A58B is used
When extension base unit A1S52B(S1), A1S55B(S1), A1S58B(S1), A52B, A55B, A58B is used, 5VDC power supply is supplied from the power supply module of the main base unit via extension cable. Thus, when one of these units is used, be careful with the following:

(a) Select a 5VDC power supply module of the main base unit with sufficient capacity to supply 5VDC current consumed by A1S52B(S1), A1S55B(S1), A1S58B(S1), A52B, A55B, A58B.
Example) If 5VDC current consumption on the main base unit is 3A and 5VDC current consumption on the A1S55B is 1A, then, the power supply module installed to the main base unit must be A1S61P(5VDC 5A).

(b) Since the power to A1S52B(S1), A1S55B(S1), A1S58B(S1), A52B, A55B, A58B is supplied via extension cable, a voltage drop occurs through the cable. It is necessary to select a power supply module and cable with proper length so that 4.75VDC or more is available at the receiving port. For the details of voltage drop, refer to Section 6.1.3, the applicable standards of extension base units.

5.2 Part Names

Part names of the power supply modules are shown here.

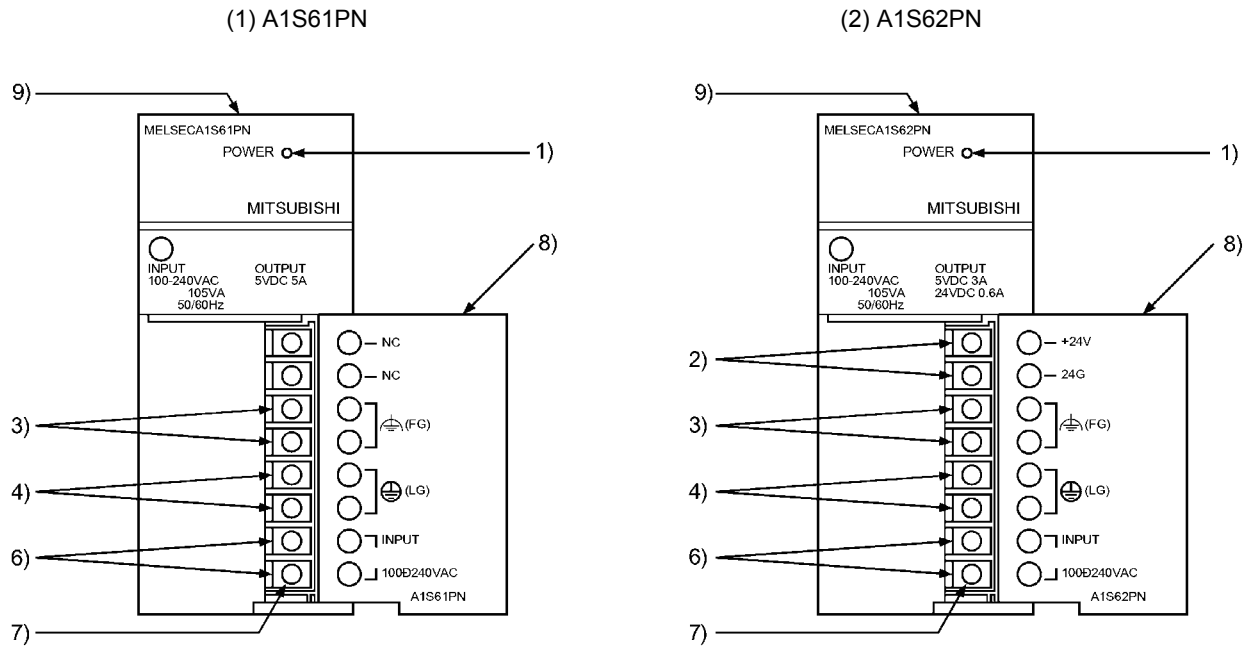

No.	Name	Description
1)	POWER LED	LED for the 5VDC power indicator.
2)	24VDC, 24GDC terminal	Used to supply 24VDC power supply to inside the output module (using external wiring).
3)	FG terminal	The ground terminal connected to the shielding pattern of the printed-circuit board.
4)	LG terminal	Grounding for the power supply filter. The potential of A1S61PN or A1S62PN terminal is 1/2 of the input voltage.

(3) A1S63P

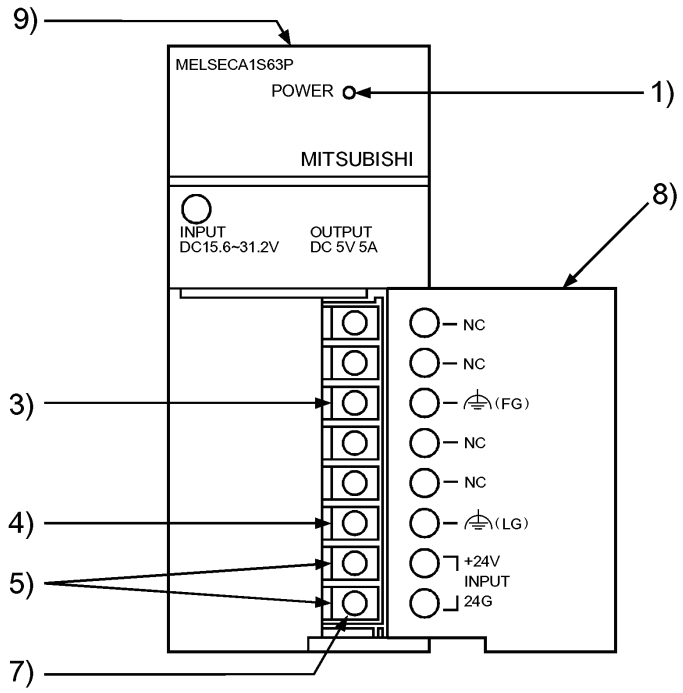

No.	Name	Description
5)	Power input terminal	Used to connect a 24VDC power supply.
6)	Power input terminal	Used to connect 100VAC to 240VAC power supply.
7)	Terminal screw	M3.5×7
8)	Terminal cover	A protective cover for the terminal block.
9)	Module mounting screw	Used to fix a module to the base unit. (M4 screw; tightening torque: 59 to 88N・cm)

POINT

(1) Do not cable to the unused terminals such as FG and LG on the terminal block (terminals whose name is not printed on the terminal cover).
(2) The protective ground terminal LG must be grounded.

6 BASE UNIT AND EXTENSION CABLE

6.1 Specifications

This section explains the specifications of the base units (the main and extension base units) and extension cables available for the systems, and the applicable standards for use of the extension base units.

6.1.1 Base unit specifications

(1) Main base unit specifications

Table 6.1 Main base unit specifications

Item	A1S32B	A1S33B	A1S35B	A1S38B
I/O module installing range	2 modules can be installed.	3 modules can be installed.	5 modules can be installed.	8 modules can be installed.
Extension possibility	Extendable			
Installation hole size	φ6 bell-shaped holes (for M5 screws)			
External dimensions	220mm (8.66inch)×130mm (5.12inch)×28mm (1.10inch)	255mm (10.03inch)×130mm (5.12inch)×28mm (1.10inch)	325mm (12.80inch)×130mm (5.12inch)×28mm (1.10inch)	430mm (16.92inch)×130mm (5.12inch)×28mm (1.10inch)
Weight	0.52kg	0.65kg	0.75kg	0.97kg
Accessory	Installation screws: M5×25, 4 pcs.			

(2) Extension base unit specifications

Table 6.2 Extension base unit specifications

Item	A1S65B	A1S65B-S1	A1S68B	A1S68B-S1	A1S52B	A1S52B-S1	A1S55B	A1S55B-S1	A1S58B	A1S58B-S1
I/O module installing range	5 modules can be installed.		8 modules can be installed.		2 modules can be installed.		5 modules can be installed.		8 modules can be installed.	
Power supply module installing requirement	Power supply module required				Power supply module not required					
Installation hole size	φ6 bell-shaped holes (for M5 screws)									
Terminal screw size	–		–		M4×6 (FG terminal)					
Applicable wire size	–		–		0.75 to 2mm^2					
Applicable solderless terminal	–		–		(V) 1.25-4 (V) 1.25-YS4(V)2-YS4A (Applicable tightening torque98 to 137N・cm)					
External dimensions	315mm (12.40inch)×130mm (5.12inch)×28mm (1.10inch)		420mm (16.54inch)×130mm (5.12inch)×28mm (1.10inch)		155mm (6.10inch)×130mm (5.12inch)×28mm (1.10inch)		260mm (10.24inch)×130mm (5.12inch)×28mm (1.10inch)		365mm (14.37inch)×130mm (5.12inch)×28mm (1.10inch)	
Weight	0.71kg		0.95kg		0.38kg		0.61kg		0.87kg	
Accessory	Installation screws: M5×25, 4 pcs.				*1 Dustproof cover (for I/O module): 1 pc. Installation screws: M5×25, 4 pcs.					

*1 1 For the attachment of the dustproof cover, refer to Section 8.6.

POINT

For the usage of the base units which do not require power supply module A1S52B(S1), A1S55B(S1), and A1S58B(S1), refer to the power supply module selection in Section 5.1.1 and the applicable standards of extension base units in Section 6.1.3 .

6.1.2 Extension cable specifications

The specifications of the extension cables applicable to PLC systems are shown in Table 6.3.

Table 6.3 Extension cable specifications

Item	A1SC01B	A1SC03B	A1SC07B	A1SC12B	A1SC30B	A1SC60B	A1SC05NB	A1SC07NB	A1SC30NB	A1SC50NB
Cable length	0.055m (0.18ft.)	0.33m (1.08ft.)	0.7m (2.30ft.)	1.2m (3.94ft.)	3.0m (9.84ft.)	6.0m (19.69ft.)	0.45m (1.48ft.)	0.7m (2.30ft.)	3.0m (9.86ft.)	5.0m (16.43ft.)
Resistive value of 5VDC supply line (at 55℃)	0.02Ω	0.02Ω	0.04Ω	0.06Ω	0.12Ω	0.18Ω	0.04Ω	0.05Ω	0.12Ω	0.18Ω
Application	Connection between a main base and A1S5□B(S1)/A1S6□B(S1)						Connection between a main base and A5□B/A6□B			
Weight	0.025kg	0.10kg	0.14kg	0.20kg	0.40kg	0.65kg	0.20kg	0.22kg	0.40kg	0.56kg

When using the extension cable, do not bundle it with the main circuit cables together, which has high voltage, large current, or install them close to each other.

6.1.3 Applicable standards of extension base units (A1S52B(S1), A1S55B(S1), A1S58B(S1), A52B, A55B, A58B)

When using the A1S52B(S1), A1S55B(S1), A1S58B(S1), A52B, A55B or A58B extension base unit, make sure that the voltage of the receiving port (the module installed in the last slot of the extension base unit) is 4.75V or more.
Since the power supply module on the main base unit supplies 5V DC to the A1S52B(S1), A1S55B(S1), A1S58B(S1), A52B, A55B or A58B extension base unit, a voltage drop occurs through the base unit and extension cable. If the specified voltage is not supplied at the receiving port, incorrect input or output may result.
If the voltage at the receiving port is less than 4.75V, replace the extension unit with the A1S65B(S1), A1S68B(S1), A62B, A65B or A68B model that has a power supply.

(1) Selection condition
Receiving voltage of the module installed in the last slot of the A1S52B(S1), A1S55B(S1), A1S58B(S1), A52B, A55B or A58B extension base unit shall be 4.75V or more.
The output voltage of the power supply module is set to 5.1V or more. Thus, a voltage drop of 0.35V or less allows use of the module.

(2) Elements of voltage drop
There are the following elements of voltage drop, (a) to (c), depending on the connection method and type of the extension base unit.

(a) Voltage drop in the main base unit
(b) Voltage drop in the extension base unit
(c) Voltage drop in the extension cable

Extension base unit used	Extension cable is connected to the left side of the main base unit (in series).	Extension cable is connected to the right side of the main base unit (parallel installation).
A1S52B(S1), A1S55B(S1) or A1S58B(S1) extension base unit is used.	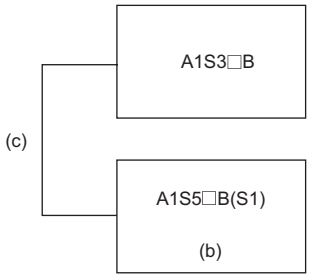 The voltage drop in the main base unit can be ignored.	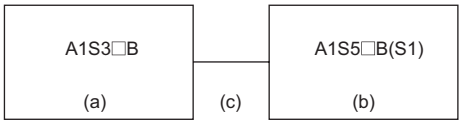
A52B, A55B or A58B extension base unit is used.	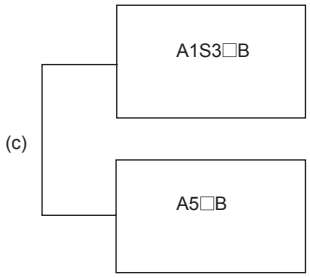 The voltage drop in the main base unit and extension base unit can be ignored.	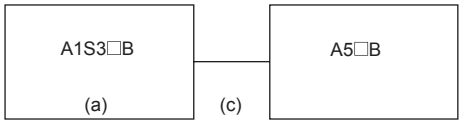 The voltage drop in the extension base unit can be ignored.

(3) Receiving voltage calculation method

	0	1	2	3	4	5	6	7	8	9	10	11	12	13	14	15
CPU module																
V_{CPU}	V_0	V_1	V_2	V_3	V_4	V_5	V_6	V_7	V_8	V_9	V_{10}	V_{11}	V_{12}	V_{13}	V_{14}	V_{15}
I_{CPU}	I_0	I_1	I_2	I_3	I_4	I_5	I_6	I_7	I_8	I_9	I_{10}	I_{11}	I_{12}	I_{13}	I_{14}	I_{15}

V_{CPU}, V_0 to V_7: Voltage drop at each slot of the main base unit
I_{CPU}, I_0 to I_7 : Current consumption at each slot of the main base unit
V_8 to V_{15} : Voltage drop at each slot of the extension base unit
I_8 to I_{15} : Current consumption at each slot of the extension base unit

(a) Calculation of voltage drops with the main base unit (A1S32B, A1S33B, A1S35B, A1S38B)
Resistive value with the main base unit is 0.007Ω per slot. Sum up the voltage drops of each slot.

1) Voltage drop at the CPU module: V_{CPU}
$V_{CPU}= 0.007\times(I_{CPU} + I_0 + I_1 + I_2 + I_3 + I_4 + I_5 + I_6 + I_7 + I_8 + I_9 + I_{10} + I_{11} + I_{12} + I_{13} + I_{14} + I_{15})$

2) Voltage drop at slot 0: V_0
$V_0= 0.007\times(I_0 + I_1 + I_2 + I_3 + I_4 + I_5 + I_6 + I_7 + I_8 + I_9 + I_{10} + I_{11} + I_{12} + I_{13} + I_{14} + I_{15})$

3) Voltage drop at slot 1: V_1
$V_1= 0.007\times(I_1 + I_2 + I_3 + I_4 + I_5 + I_6 + I_7 + I_8 + I_9 + I_{10} + I_{11} + I_{12} + I_{13} + I_{14} + I_{15})$

4) Voltage drop at slot 2: V_2
$V_2= 0.007\times(I_2 + I_3 + I_4 + I_5 + I_6 + I_7 + I_8 + I_9 + I_{10} + I_{11} + I_{12} + I_{13} + I_{14} + I_{15})$

5) Voltage drop at slot 3: V_3
$V_3= 0.007\times(I_3 + I_4 + I_5 + I_6 + I_7 + I_8 + I_9 + I_{10} + I_{11} + I_{12} + I_{13} + I_{14} + I_{15})$

6) Voltage drop at slot 4: V_4
$V_4= 0.007\times(I_4 + I_5 + I_6 + I_7 + I_8 + I_9 + I_{10} + I_{11} + I_{12} + I_{13} + I_{14} + I_{15})$

7) Voltage drop at slot 5: V_5
$V_5= 0.007\times(I_5 + I_6 + I_7 + I_8 + I_9 + I_{10} + I_{11} + I_{12} + I_{13} + I_{14} + I_{15})$

8) Voltage drop at slot 6: V_6
$V_6=0.007\times(I_6 + I_7 + I_8 + I_9 + I_{10} + I_{11} + I_{12} + I_{13} + I_{14} + I_{15})$

9) Voltage drop at slot 7: V_7
$V_7=0.007\times(I_7 + I_8 + I_9 + I_{10} + I_{11} + I_{12} + I_{13} + I_{14} + I_{15})$

10) Total voltage drop at the main base unit: V_K
$V_K=V_{CPU} + V_0 + V_1 + V_2 + V_3 + V_4 + V_5 + V_6 + V_7$

(b) Voltage drop calculation on the extension base unit (A1S52B(S1), A1S55B(S1), A1S58B(S1))

The resistive value on the extension base unit is 0.006Ω per slot.
Calculate the voltage drop of each slot and obtain the total voltage drop.

1) Voltage drop at slot 8: V_8
   $V_8=0.006\times(I_8 + I_9 + I_{10} + I_{11} + I_{12} + I_{13} + I_{14} + I_{15})$
2) Voltage drop at slot 9: V_9
   $V_9=0.006\times(I_9 + I_{10} + I_{11} + I_{+} + I_{13} + I_{14} + I_{15})$
3) Voltage drop at slot 10: V_{10}
   $V_{10}=0.006\times(I_{10} + I_{11} + I_{12} + I_{13} + I_{14} + I_{15})$
4) Voltage drop at slot 11: V_{11}
   $V_{11}=0.006\times(I_{11} + I_{12} + I_{13} + I_{14} + I_{15})$
5) Voltage drop at slot 12: V_{12}
   $V_{12}=0.006\times(I_{12} + I_{13} + I_{14} + I_{15})$
6) Voltage drop at slot 13: V_{13}
   $V_{13}=0.006\times(I_{13} + I_{14} + I_{15})$
7) Voltage drop at slot 14: V_{14}
   $V_{14}=0.006\times(I_{14} + I_{15})$
8) Voltage drop at slot 15: V_{15}
   $V_{15}=0.006\times I_{15}$
9) Total voltage drop at the extension base unit: V_Z
   $V_Z=V_8 + V_9 + V_{10} + V_{11} + V_{12} + V_{13} + V_{14} + V_{15}$

(c) Calculation of voltage drop through the extension cable

[1] Total current consumption of the extension base unit: I_z
   $I_Z= I_8 + I_9 + I_{10} + I_{11} + I_{12} + I_{13} + I_{14} + I_{15}$

[2] Voltage drop of the extension cable: V_c
   V_c=(Resistive value of the extension cable) × I_z

Resistive value of extension cable

A1SC01B.....0.02Ω	A1SC60B 0.182Ω
A1SC03B.....0.021Ω	A1SC05NB 0.037Ω
A1SC07B.....0.036Ω	A1SC07NB 0.045Ω
A1SC12B.....0.055Ω	A1SC30NB 0.12Ω
A1SC30B.....0.121Ω	A1SC50NB 0.18Ω

(d) Verification of the receiving port voltage

$(5.1(V) - V_K - V_Z - V_C) \geqq 4.75(V)$

(4) Calculation examples

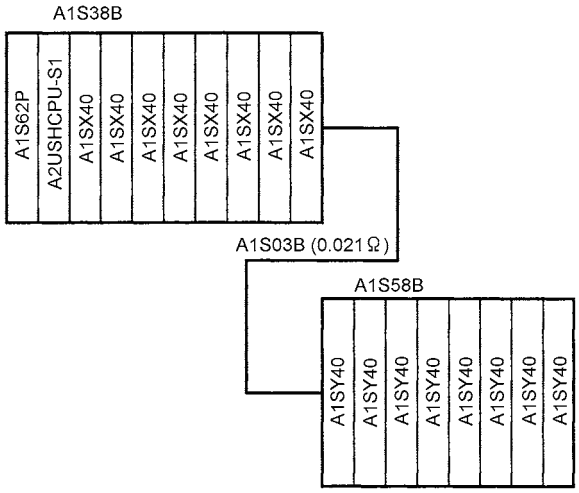

(a) Calculation of voltage drop on the main base unit

$V_K = 0.007 \times \{0.32 + 0.05 \times (9 + 8 + 7 + 6 + 5 + 4 + 3 + 2) + (0.27 \times 8) \times 9\}$
$= 0.15372$

(b) Calculation of voltage drop on the extension base unit

$V_Z = 0.006 \times 0.27 \times (8 + 7 + 6 + 5 + 4 + 3 + 2 + 1) = 0.05832$

(c) Voltage drop on the extension cable

$V_C = 0.021 \times (0.27 \times 8) = 0.04536$

(d) Verification of the receiving port voltage

5.1 - 0.15372 - 0.05832 - 0.04536 = 4.8426(V)

Since the receiving port voltage is more than 4.75V, the above system is usable.

(5) To reduce the voltage drop

The following methods are effective to reduce the voltage drop.

(a) Change the installing position of the module

Install modules with large current consumption in order from slot 0 of the main base unit.

Install modules with small current consumption to the extension base unit.

(b) Connect the base units in series

By connecting base units in series (connecting the extension cable to the left side of the main base unit. Refer to this section (2), the voltage drop on the main base unit can be ignored.

If the extension cable is long, however, the voltage drop through the cable may be larger than that on the main base unit. Therefore, calculate the voltage drop according to (3).

(c) Use a shorter extension cable

The shorter the extension cable is, the smaller the resistive value and the voltage drop become.

Use the shortest extension cable possible.

6.2 Part Names

Part names of the base unit are shown here.

(1) Main base unit (A1S32B, A1S33B, A1S35B, A1S38B)

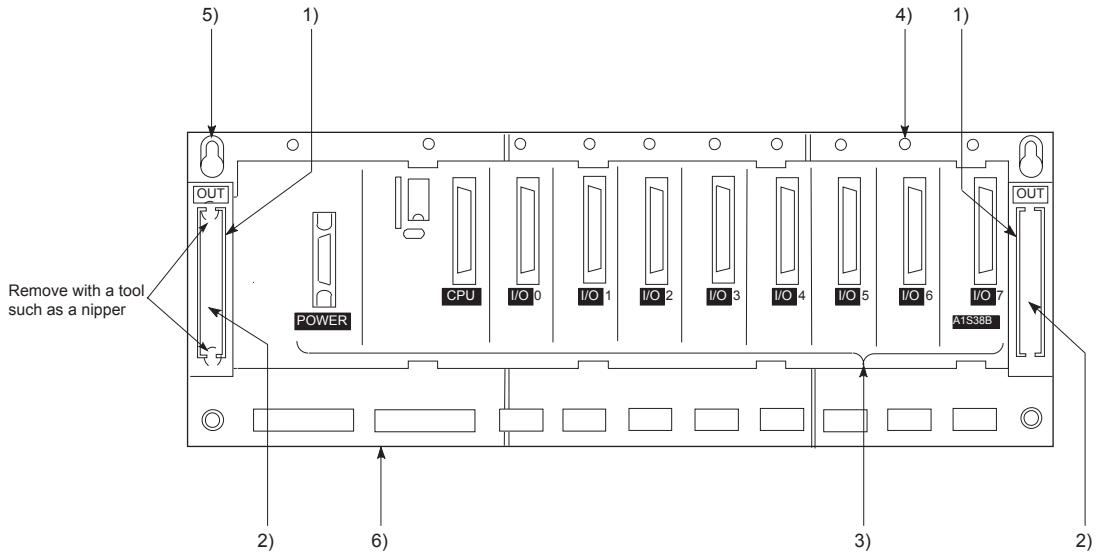

No.	Name	Description
1)	Extension cable connector	A connector used to connect an extension cable, by which signals can be transferred to/from an extension base unit.
2)	Base cover	A protective cover for the extension cable connector. When connecting extension cables, remove the area (refer to the part in the above figure) with a tool such as a nipper.
3)	Module connector	Connectors used to install the power supply module, CPU module, I/O modules and/or special function modules. To prevent dust from entering, install the supplied connector cover or a blank cover (A1SG60) to any open connector.
4)	Module mounting screw hole	Screw mounting hole to fix the module to the base. Screw size: for M4 screw
5)	Base installation hole	A bell-shaped hole used to install the base unit to a control panel. (For M5 screw)
6)	Hook for DIN rail	Hook for DIN rail installation. A1S32B, A1S33B ..... 1 pc A1S35B, A1S38B 2pcs

IMPORTANT
Only one extension base unit can be connected to the main base unit. Connecting 2 extension base units to the main base unit through 2 extension connectors may cause incorrect input or output.

(2) Extension base unit (A1S52B, A1S55B, A1S58B, A1S52B-S1, A1S55B-S1, A1S58B-S1, A1S65B, A1S68B, A1S65B-S1, A1S68B-S1)

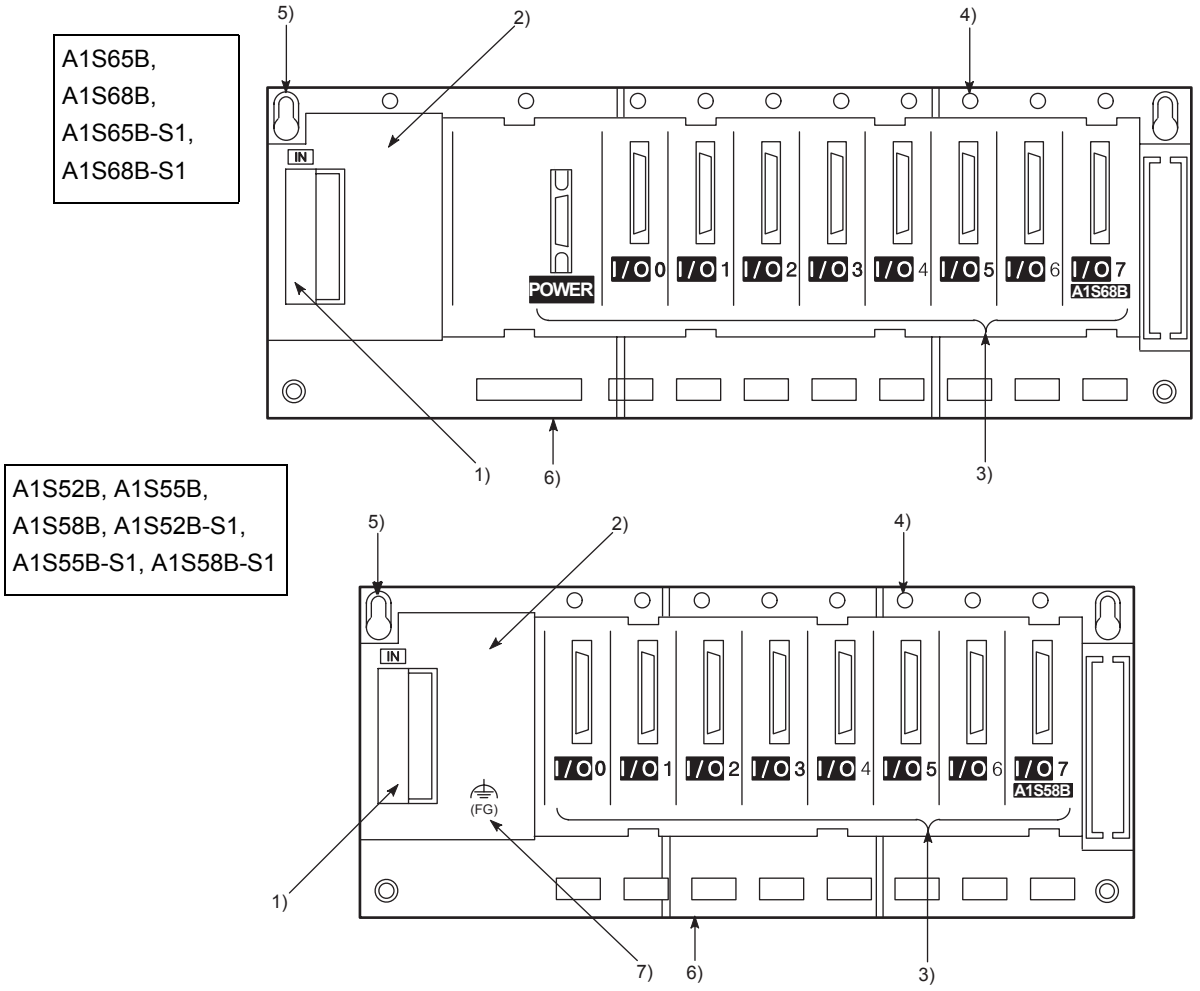

No.	Name	Description
1)	Extension cable connector	A connector used to connect an extension cable, by which signals can be transferred to/from an main base unit. Before connecting the extension cable, remove the supplied connector cover.
2)	Base cover	A protective cover for the extension cable connector.
3)	Module connector	Connectors used to install the power supply module, I/O modules and/or special function modules. To prevent dust from entering, install the supplied connector cover or a blank cover (A1SG60) to any open connector.
4)	Module mounting screw hole	Screw mounting hole to fix the module to the base. Screw size: for M4 screw
5)	Base installation hole	A bell-shaped hole used to install the base unit to a control panel. (For M5 screw)
6)	Hook for DIN rail	Hook for DIN rail installation. A1S52B, A1S55B, A1S52B-S1, A1S55B-S1.....1 pc A1S65B, A1S68B, A1S58B, A1S65B-S1, A1S68B-S1, A1S58B-S1.....2 pcs
7)	FG terminal	The ground terminal connected to the shielding pattern of the printed-circuit board.

6.3 Installation and Removal of DIN Rail

Each of the main and extension base units is supplied with a DIN rail hook as standard. The following explains how to install the DIN rail.

(1) Applicable DIN rail type (JIS C 2812)
TH35-7.5Fe
TH35-7.5Al
TH35-15Fe

(2) DIN rail installation screw pitch
When using the TH35-7.5Fe or TH35-7.5Al type DIN rail, tighten the rail-installation screws by a pitch of 200mm or less to ensure the strength.

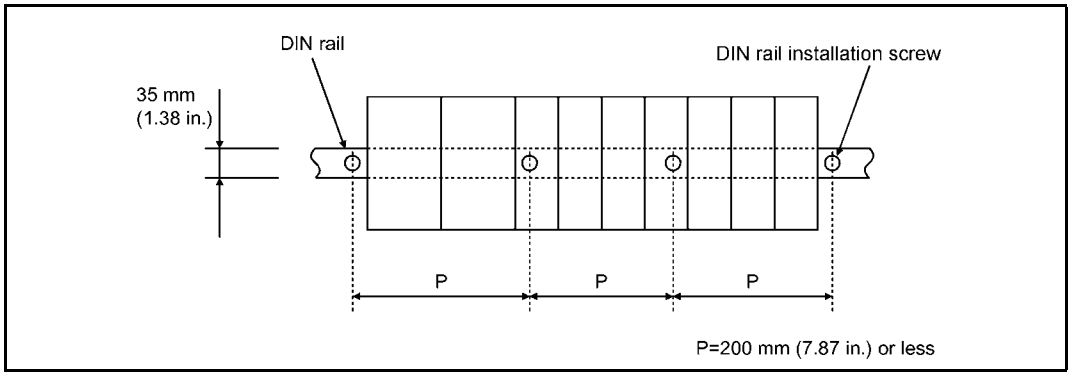

(3) Installing to and removing from the DIN rail

(a) Installing the unit to the DIN rail

The base unit is installed to the DIN rail as follows:

[1] Engage the upper side groove on the base unit with the upper part of the DIN rail.

[2] Press the base unit to the DIN rail to fix them.

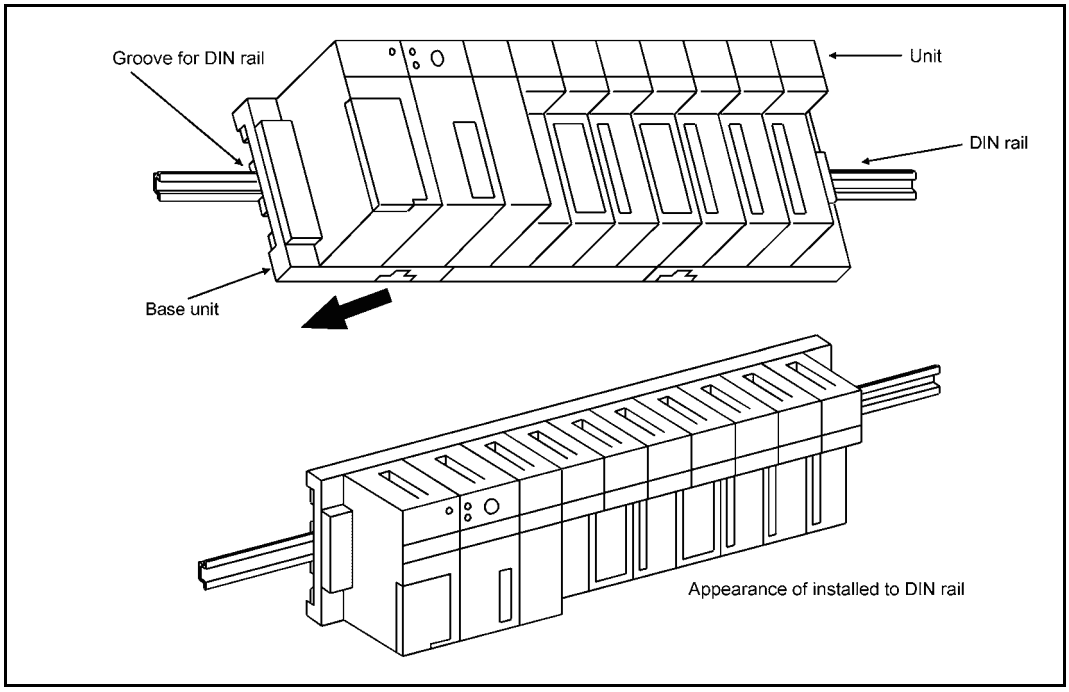

(b) Removing the unit from the DIN rail

The base unit is removed from the DIN rail as follows:

[1] Pull out the projection on the bottom of the base unit with the flat-head screwdriver (6 × 100).

[2] With the projection pulled out, pull the base unit to remove it from the DIN rail.

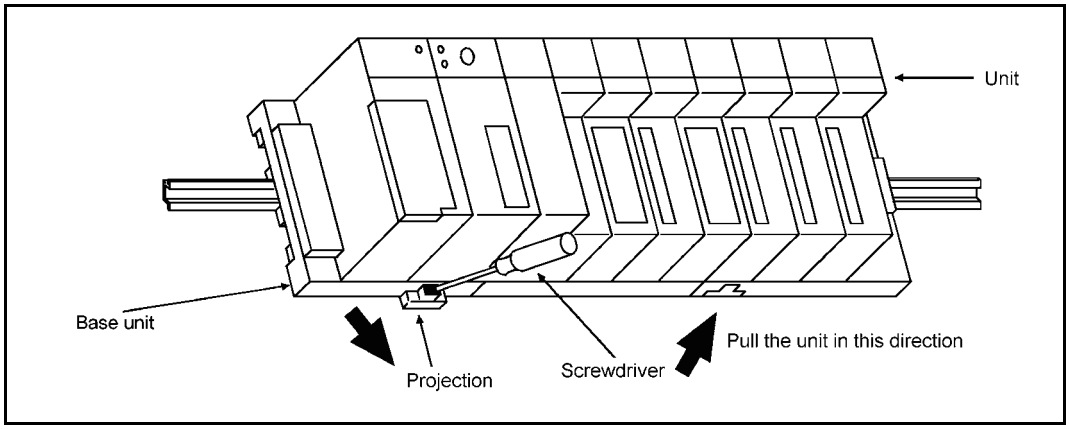

7 MEMORY CASSETTE AND BATTERY

7.1 Memory Cassette

This section explains the specifications of the memory cassette, the handling precautions and the installation and removal procedures.

7.1.1 Specifications

The specifications of the memory cassette are shown in Table 7.1

Table 7.1 Specifications of the memory cassette

Item	A2SNMCA-30KE
Memory specification	E^2PROM
Memory capacity	64k bytes (Max. 30k steps)
Maximum number of writes for E^2PROM	100,000 times
External dimensions	15mm (0.59inch)×69.6mm (2.74inch)×40.5mm (1.59inch)
Weight	0.03kg

7.1.2 Handling precautions

This section explains the specifications of the memory cassette, the handling precautions and the installation and removal procedures.

(1) Since the memory cassette and pin connector are made of resin, do not drop them or apply heavy impact to them.

(2) Do not remove the printed board of memory cassette from the case. Doing so could give damage to the module.

(3) Carefully prevent foreign matter such as wire chips from entering the inside of the memory cassette.
If it does get inside the module, remove it immediately.

(4) When installing the memory cassette into the CPU module, fully press it to the connector.

(5) Do not place the memory cassette on a metal object where current is or can be leaked, or materials like wood, plastic, vinyl, fibers, electric wires or paper where static electricity is charged.

(6) Do not touch the lead of the memory. This may damage the memory.

(7) Do not touch the CPU connector of the memory cassette. Doing so may cause poor contact.

IMPORTANT

(1) Before installing the memory cassette to or removing it from the CPU module, make sure that the power is OFF. Installing or removing the memory cassette with power ON destroys its memory.
(2) The RAM memory in the CPU module (parameters, T/C set values, main program, MELSECNET/10 network parameters) is not overwritten even if the CPU module is powered ON with the E^2PROM memory cassette installed.
If the RAM memory is needed, back up the data using a peripheral device before installing the memory cassette.
(3) Memory cassette cannot be installed to the CPU module.

7.1.3 Installation and removal of memory cassette

> ⚠ CAUTION
> ● Insert the memory cassette and fully press it to the memory cassette connector.
> Check for incomplete connection after installing it.
> Poor electrical contact may cause a malfunctions.

How to install and remove the memory cassette is described below.

(1) Installation of the memory cassette

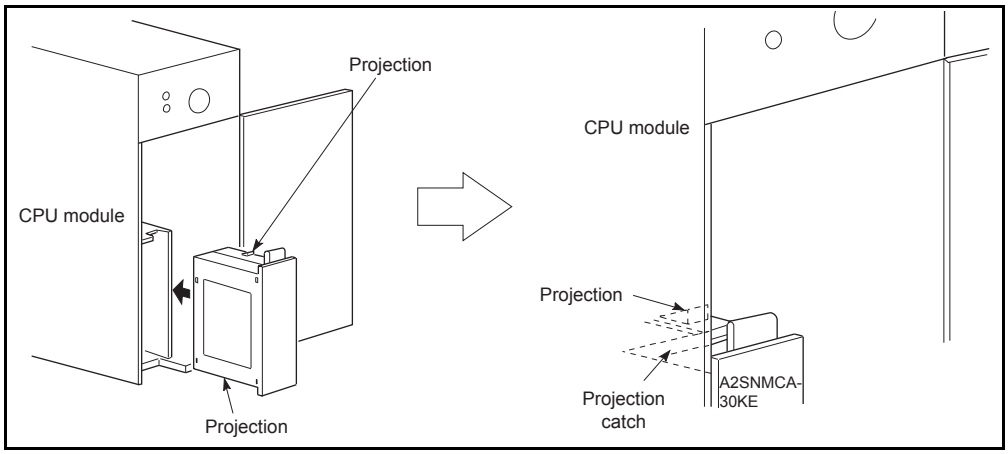

(a) Facing the model name side of the memory cassette to the operator with the model name shown on the top, insert it into the applied part of CPU module until a click is heard (a tab is engaged.)

(b) Check that the hooks on the top and bottom of the memory cassette are engaged with the catches of the CPU module.
(If the memory cassette is not installed correctly, the front cover of the CPU module will not be closed.)

(2) Removal of the memory cassette

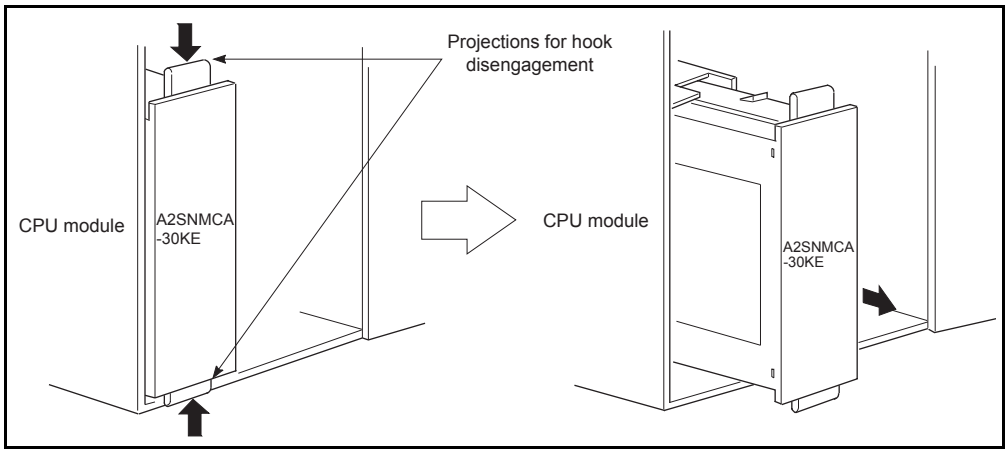

(a) While pressing the top and bottom projections for hook disengagement with fingers, pull the memory cassette.

7.1.4 Memory protection setting of A2SNMCA-30KE

When the A2SNMCA-30KE is installed in the CPU module, memory protection can be set up to the A2SNMCA-30KE to prevent the E^2PROM memory from being modified by erroneous operation of peripheral equipment.
Setting the memory protection setting pin to ON allows the user memory area of 64k bytes to be protected all at once.
To modify the ROM memory, disable the memory protection (OFF).
The memory protection setting pin is set to OFF as factory default.
For memory area assignment, refer to Section 4.5.2.

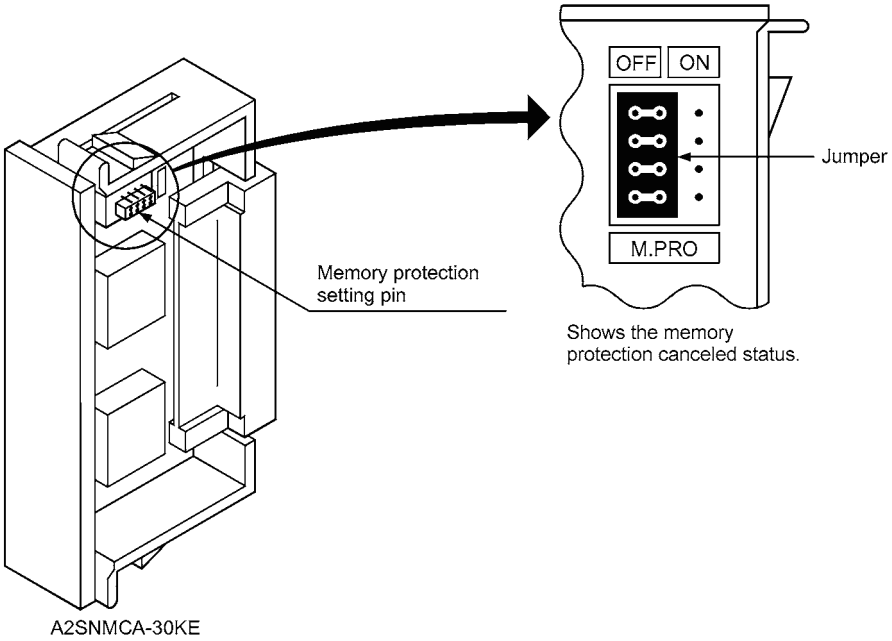

7.2 Battery

This section explains the specifications, handling precautions and installation procedures of the battery.

> ⚠ DANGER
> ● Properly connect batteries. Do not charge, disassemble, heat, or throw them into the fire and do not make them short-circuited and soldered.
> Incorrect battery handling may cause personal injuries or a fire due to exothermic heat, burst and/or ignition.

7.2.1 Specifications

The specifications of the battery used for power failure compensation are shown in Table 7.2.

Table7.2 Battery specifications

Item	A6BAT
Classification	Thionyl chloride lithium battery
Initial voltage	3.6VDC
Battery guarantee period	5 years
Lithium content	0.48g
Application	IC-RAM memory backup and power failure compensation
External dimensions	φ16mm (0.63inch)×30mm (1.18inch)

REMARK

For the battery directive in EU member states, refer to Appendix7.

7.2.2 Handling precautions

This section explains the specifications, handling precautions and installation procedures of the battery.

(1) Do not short it.
(2) Do not disassemble it.
(3) Do not put it in a fire.
(4) Do not heat it.
(5) Do not solder to the electrodes.

7.2.3 Battery installation

The battery connector is removed to prevent battery consumption during distribution and storage.
Connect the lead connector of the battery to the battery connector on the CPU module print broad before using CPU module for the following objectives:

- Using the sequence program, file registers or comments in the user program area in the CPU module
- Using the power failure compensation function

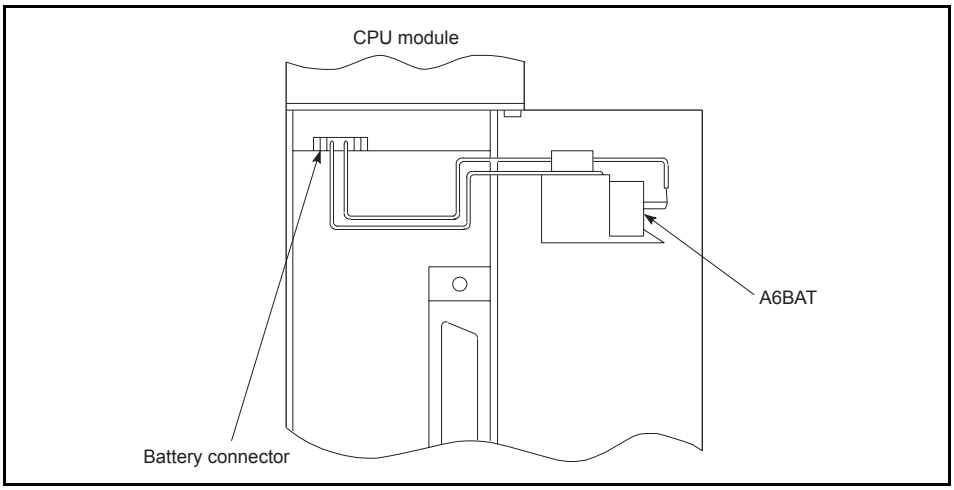

8 LOADING AND INSTALLATION

To increase the system reliability and fully utilize the functions, procedures and cautions concerning loading and installation are described below.

8.1 Fail-Safe Circuit Concept

When the PLC is powered ON and then OFF, improper outputs may be generated temporarily depending on the delay time and start-up time differences between the PLC power supply and the external power supply for the control target (especially, DC).
For example, if the external power supply for the control target is powered ON and then the PLC is powered ON, the DC output module may generate incorrect outputs temporarily upon the PLC power-ON. Therefore, it is required to build the circuit that energizes the PLC by priority.
The external power failure or PLC failure may lead to the system error.
In order to eliminate the possibility of the system error and ensure fail-safe operation, build the following circuit outside the PLC: emergency stop circuit, protection circuit and interlock circuit, as they could cause machine damages and accidents due to the abovementioned failures.
An example of system design, which is based on fail-safe concept, is provided on the next page.

DANGER

- Create a safety circuit outside the PLC to ensure the whole system will operate safely even if an external power failure or a PLC failure occurs.
  Otherwise, incorrect output or malfunction may cause an accident.
  (1) For an emergency stop circuit, protection circuit and interlock circuit that is designed for incompatible actions such as forward/reverse rotation or for damage prevention such as the upper/lower limit setting in positioning, any of them must be created outside the PLC.
  (2) When the PLC detects the following error conditions, it stops the operation and turn off all the outputs.
  - The overcurrent protection device or overvoltage protection device of the power supply module is activated.
  - The PLC CPU detects an error such as a watchdog timer error by the self-diagnostics function.
    In the case of an error of a part such as an I/O control part that cannot be detected by the PLC CPU, all the outputs may turn on. In order to make all machines operate safely in such a case, set up a fail-safe circuit or a specific mechanism outside the PLC.

  (3) Depending on the failure of the output module's relay or transistor, the output status may remain ON or OFF incorrectly. For output signals that may lead to a serious accident, create an external monitoring circuit.
- If load current more than the rating or overcurrent due to a short circuit in the load has flowed in the output module for a long time, it may cause a fire and smoke. Provide an external safety device such as a fuse.
- Design a circuit so that the external power will be supplied after power-up of the PLC. Activating the external power supply prior to the PLC may result in an accident due to incorrect output or malfunction.

DANGER

- For the operation status of each station at a communication error in data link, refer to the respective data link manual.
  The communication error may result in an accident due to incorrect output or malfunctions.
- When controlling a running PLC (data modification) by connecting a peripheral device to the CPU module or a PC to a special function module, create an interlock circuit on sequence programs so that the whole system functions safely all the time.
  Also, before performing any other controls (e.g. program modification, operating status change (status control)), read the manual carefully and ensure the safety.
  In these controls, especially the one from an external device to a PLC in a remote location, some PLC side problem may not be resolved immediately due to failure of data communications.
  To prevent this, create an interlock circuit on sequence programs and establish corrective procedures for communication failure between the external device and the PLC CPU.
- When setting up the system, do not allow any empty slot on the base unit.
  If any slot is left empty, be sure to use a blank cover (A1SG60) or a dummy module (A1SG62) for it.
  When using the extension base unit, A1S52B(S1), A1S55B(S1), A1S58B(S1), attach the included dustproof cover to the module in slot 0.
  Otherwise, internal parts of the module may be flied in the short circuit test or when an overcurrent or overvoltage is accidentally applied to external I/O section.

CAUTION

- Do not install the control lines or communication cables together with the main circuit or power lines, or bring them close to each other.
  Keep a distance of 100mm (3.9inch) or more between them.
  Failure to do so may cause malfunctions due to noise.
- When an output module is used to control the lamp load, heater, solenoid valve, etc., a large current (ten times larger than the normal one) may flow at the time that the output status changes from OFF to ON. Take some preventive measures such as replacing the output module with the one of a suitable current rating.

(1) System design circuit example

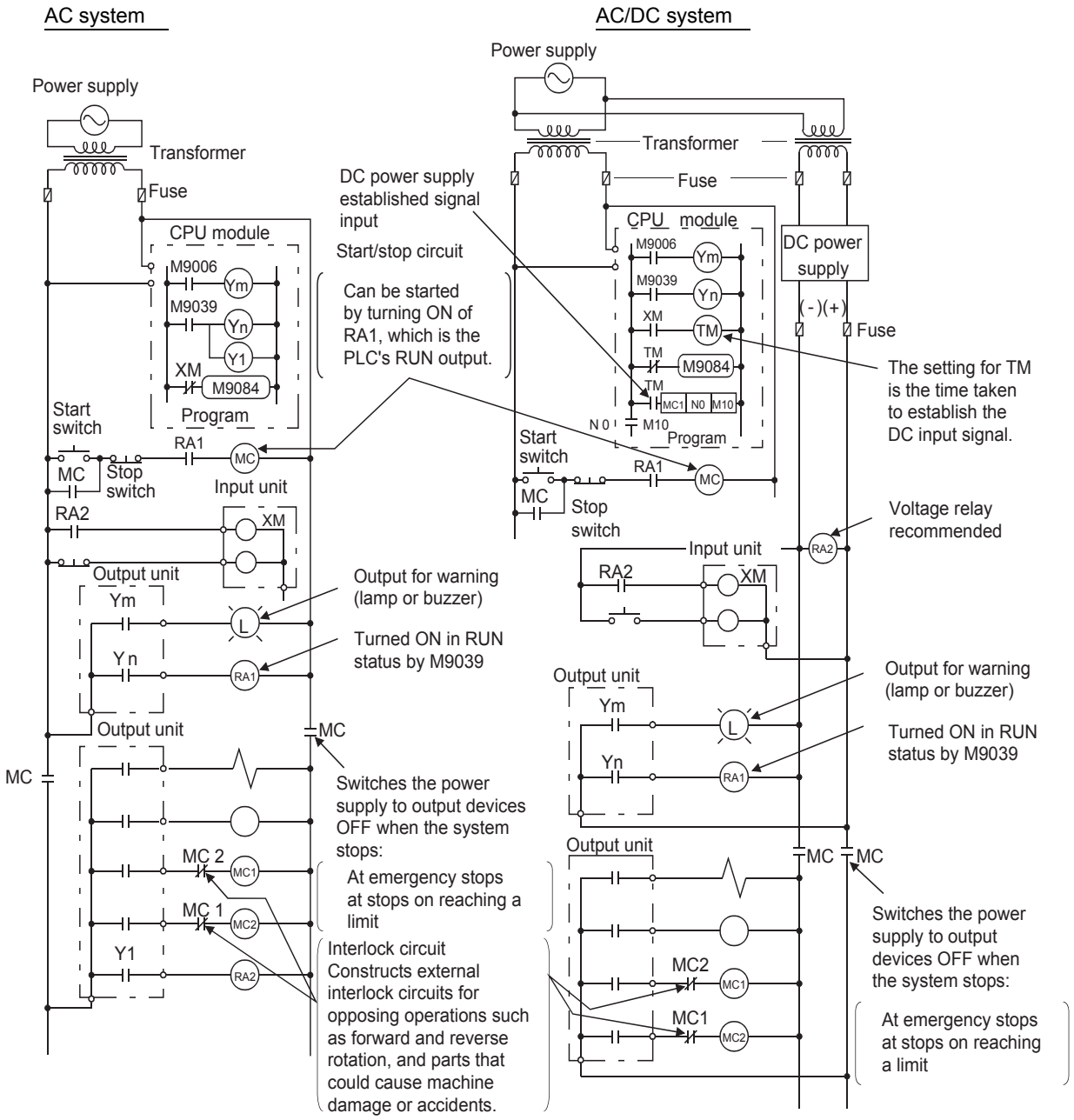

The procedures used to switch on the power supply are indicated below.

AC system

1) Switch the power supply ON.
2) Set the CPU module to RUN.
3) Switch the start switch ON.
4) The output equipments are driven in accordance with the program when the magnetic contactor (MC) comes ON.

AC/DC system

1) Switch the power supply ON.
2) Set the CPU module to RUN.
3) Switch RA2 ON when the DC power supply starts.
4) Set the timer (TM) to "ON" upon 100% establishment of DC power supply.
   (Set value for TM shall be the period from RA2 turned "ON" to 100% establishment of DC power supply. Make this set value 0.5 seconds.)
5) Switch the start switch ON.
6) The output equipments are driven in accordance with the program when the magnetic contactor (MC) comes ON.
   (When a voltage relay is used for RA2, the timer in the program (TM) is not necessary.)

(2) Fail-safe measures to cover the possibility of PLC failure

Problems with a CPU module and memory can be detected by the self diagnostics function. However, problems with I/O control area may not be detected by the CPU module.

In such cases, there is a possibility of setting all points to ON or OFF, or a situation may develop where normal operations and safety of the controlled subject cannot be assured, depending on the condition of the failure.

Though Mitsubishi PLCs are manufactured under strict quality control, they may fail or malfunction due to unspecified reasons. To prevent the whole system failure, machine breakdown, and accidents, build a fail-safe circuit outside the PLC.

Examples of a system and its fail-safe circuitry are described below:

＜System example＞

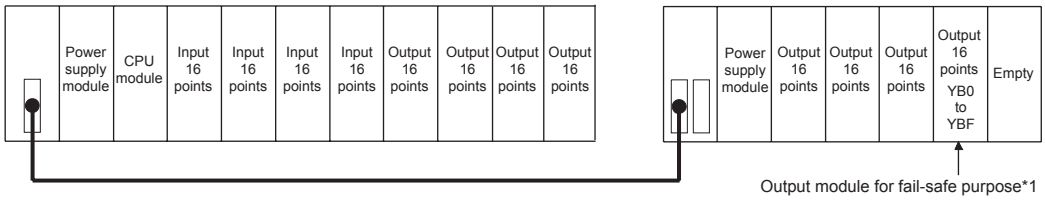

*1 The output module for fail-safe purpose should be mounted on the last slot of the system. (YB0 to YBF in the above system.)

＜Example fail safe circuits＞

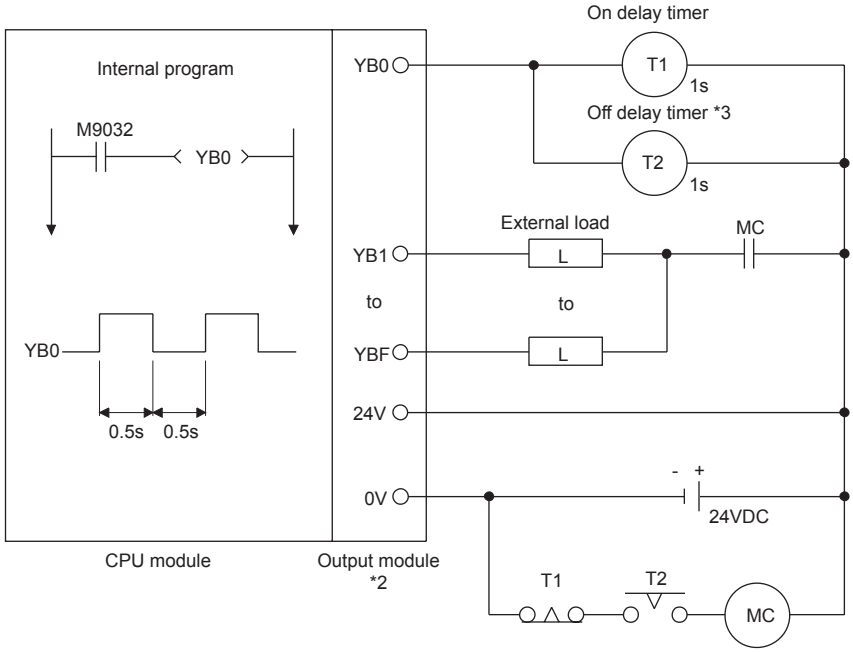

*2 Since YB0 turns ON and OFF alternatively at 0.5 second intervals, use a contactless output module (a transistor is used in the above example).

*3 If an off delay timer (especially miniature timer) is not available, construct the failsafe circuit using an on delay timer shown on the next page.

When constructing a fail safe circuit using on delay timers only

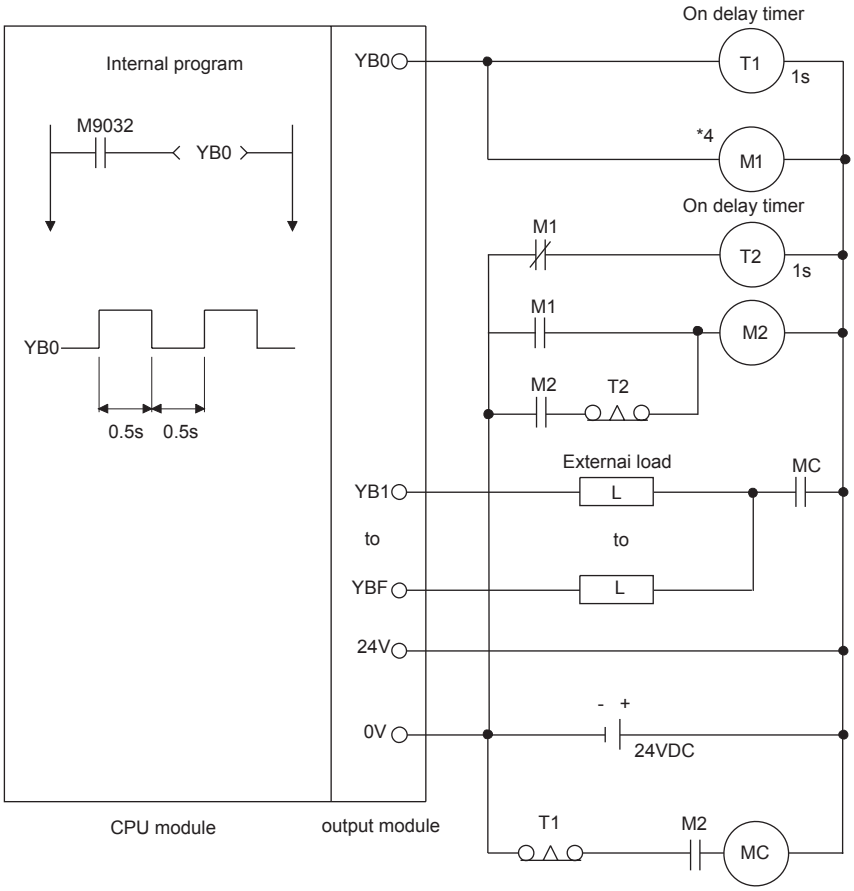

*4 Use a solid state relay for the M1 relay.

8.2 Installation Environment

Avoid the following environment when you install the PLC system:

(1) A location in which the ambient temperature falls outside the range of 0 to 55℃.

(2) A location in which the ambient humidity falls outside the range of 10 to 90%RH.

(3) Location in which condensation may occur due to drastic changes in temperature.

(4) A location in which corrosive gas or combustible gas exists.

(5) A location in which a lot of conductive powdery substance such as dust and iron filing, oil mist, salt, or organic solvent exists.

(6) A location exposed to direct sunlight.

(7) A location in which strong electric fields or magnetic fields form.

(8) A location in which the main unit is exposed to direct vibration or impact.

8.3 Calculation Method of Heat Amount Generated by the PLC

It is necessary to keep the temperature of the panel which stores the PLC to the operating ambient temperature of the PLC, which is 55℃, or below. For heat dissipation design of the panel, it is necessary to know the average power consumption (heat generation) of the devices and machinery stored inside. In this section, a method to obtain the average power consumption of the PLC system is explained. Calculate the temperature rise inside the panel from the power consumption.

(Calculation method of average power consumption)
The power consuming parts of the PLC may be roughly classified into the blocks as shown below:

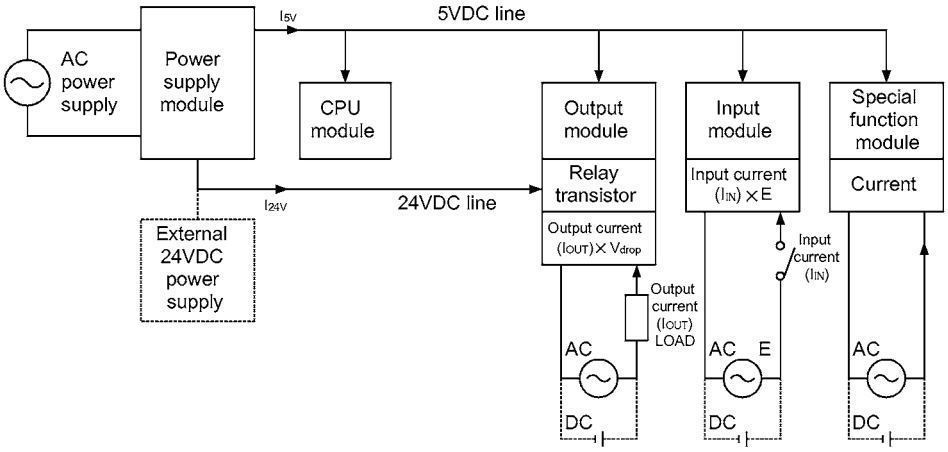

(1) Power consumption by power supply module
The power conversion efficiency of the power supply module is about 70%, and 30% is consumed as heat generated, thus, 3/7 of the output power is the power consumption. Therefore, the calculation formula is:

$$Wpw=\frac{3}{7}\{(I_{5V}\times 5) + (I_{15V}\times 15) + (I_{24V}\times 24)\}(W)$$

I_{5V} : Current consumption of 5VDC logic circuit of each module

I_{15V}: Current consumption of 15VDC external power supply part of special function module

I_{24V}: Average current consumption of 24VDC power supply for internal consumption of the output module
(Current consumption equivalent to the points simultaneously ON)
Not applicable to a system where 24VDC is supplied externally and a power supply module which does not have a 24VDC output is used.

(2) Total power consumption of each module at 5VDC logic part
Power of the 5VDC output circuit of the power supply module is the power consumption of each module.

$$W_{5V}=I_{5V}\times 5(W)$$

(3) Total 24VDC average power consumption of the output module (power consumption equivalent to the points simultaneously ON)
Average power of the 24VDC output circuit of the power supply module is the total power consumption of each module.

$W_{24V}=I_{24V}\times 24$(W)

(4) Total 24VDC average power consumption of the output module
(power consumption equivalent to the points simultaneously ON)

$W_{OUT}=I_{OUT}\times V_{drop}\times$ Output points × Simultaneous ON ratio (W)

I_{OUT} : Output current (current actually used) (A)
V_{drop} : Voltage drop of each output module (V)

(5) Average power consumption of the input modules at the input part (power consumption equivalent to the points simultaneously ON)

$W_{IN}=I_{IN}\times E\times$ Input points × Simultaneous ON (W)

I_{IN} : Input current (effective value in the case of AC) (A)
E : Input voltage (voltage for actual usage) (V)

(6) Power consumption of the external power supply part of the special function module

$W_S=I_{+15V}\times 15 + I_{-15V}\times 15 + I_{24V}\times 24$(W)

The total of the power consumption calculated for each block as above is the power consumption of the PLC system as a whole.

$W=W_{PW} + W_{5V} + W_{24V} + W_{OUT} + W_{IN} + W_S$ (W)

Calculate the amount of heat generation and temperature rise inside the panel from the total power consumption (W).
Simplified calculation formula to obtain temperature rise inside panel is shown next:

$T=\frac{W}{U}$ [°C]

W: Power consumption of the PLC system as a whole (the value obtained above)
A: Inside surface area of the panel [m^2]
U: When inside temperature of the panel is kept constant by a fan, etc.....6
When the air inside the panel is not circulated 4

POINT
When the temperature rise inside the panel exceeds the specified range, it is recommended to lower the temperature inside the panel by installing a heat exchanger to the panel. If a conventional ventilation fan is used, it sucks dust along with the outside air, which may affect the PLC, so care must be taken.

8.4 Installing the Base Units

Precautions concerning installation of the main base unit and extension base unit are described next.

8.4.1 Precautions when installing PLC

Precautions concerning the installation of PLC to the panel, etc. are explained below.

(1) To improve the ventilation and to facilitate the exchange of the module, provide at least 30mm (1.18inch) of distance between the top part of the module and any structure or part.
However, when A52B, A55B, A58B, A62B, A65B or A68B extension base unit is used, provide at least 80mm (3.15inch) of distance between the top of the unit and any structural part.

(2) Do not install vertically or horizontally, because of concerns with ventilation.

(3) If there are any protrusions, dents or distortion on the installation surface of the base unit, an excessive force is applied to the printed-circuit board and causes problems, so, install to a flat surface.

(4) Avoid sharing the same panel with any source of vibration such as a large-sized magnetic contactor or no-fuse breaker, and install to a separate panel or away from such devices.

(5) Provide wiring ducts as necessary.
However, when the clearance of the top and bottom of the PLC are smaller than those shown in figure 8.1, pay attention to the following:
(a) When installing to the top of PLC, to improve the ventilation, keep the height of the duct to 50mm (1.97inch) or below.
In addition, the distance from the top of the PLC should be sufficient for tightening and loosening works for the mounting screws on the top of the module.
The module cannot be replaced if the screws on the top of the module cannot be loosened or tightened.
(b) When installing to the bottom part of the PLC, provide a sufficient space so that the 100/200VAC input line of the power supply module, I/O wires of I/O modules and 12/24VDC lines are not affected.

(6) If any device is installed in front of the PLC (i.e. installed in the back of the door), position it to secure at least 100mm (3.94inch) of distance to avoid the effects of radiated noise and heat.
Also, keep at least 50mm (1.97inch) distance from the base unit to any device placed on right or left or the unit.

(7) When installing the base unit to DIN rail in an environment with large vibration, use a vibration-proofing bracket (A1S-PLT-D). Mounting the vibration-proofing bracket (A1S-PLT-D) enhances the resistance to vibration.
Depending on the environment to set up the base unit, it is also recommended to fix the base unit to the control panel directly.

8.4.2 Installation

Installation location of the main base unit and the extension base unit is shown below.

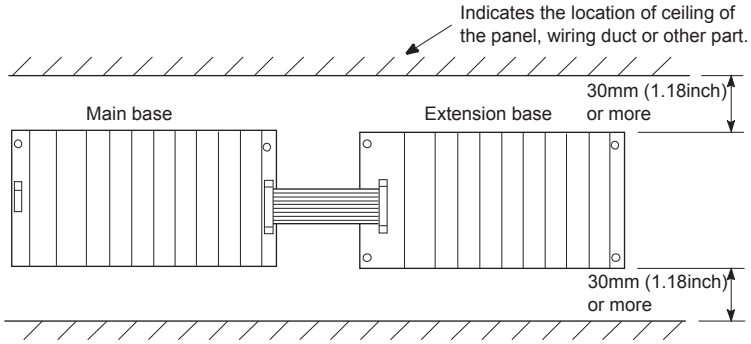

Figure8.1 Parallel installation

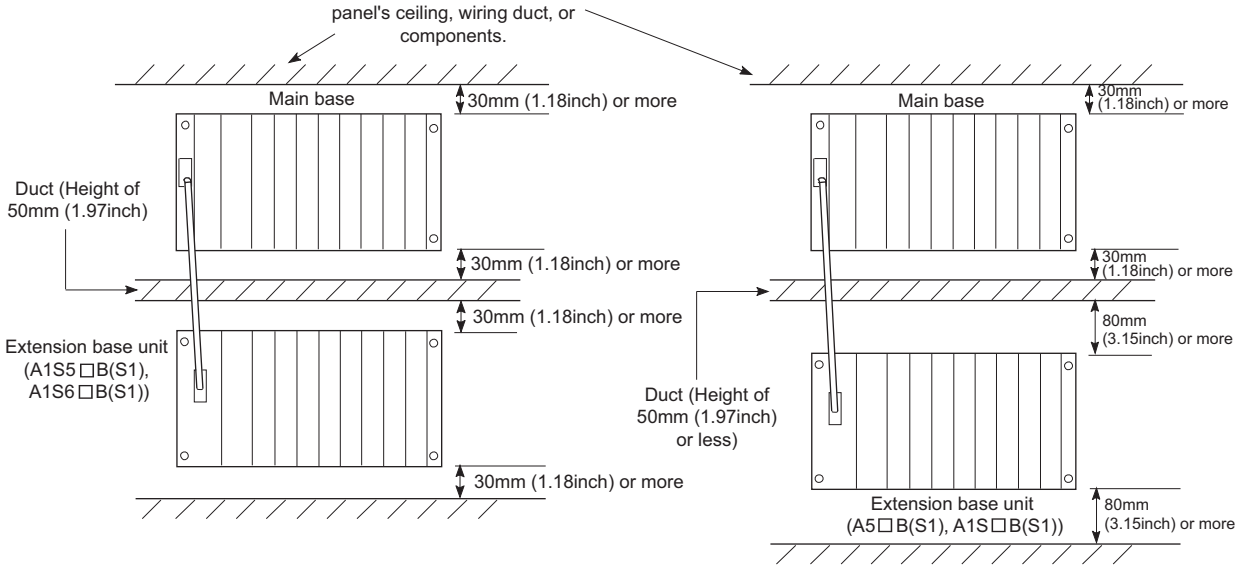

Figure8.2 Series installation

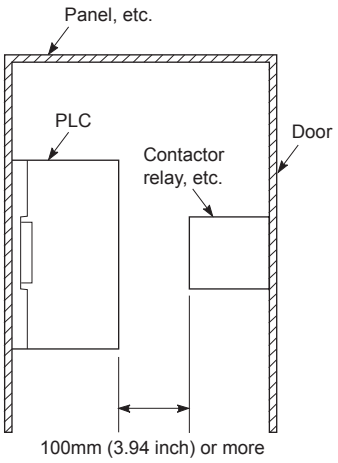

Figure8.3 Distance between the front face of the PLC and other devices

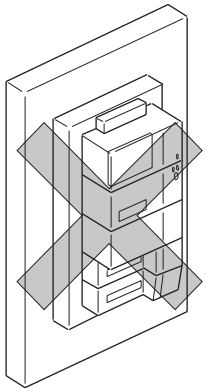

Figure8.4 Vertical installation (not allowed)

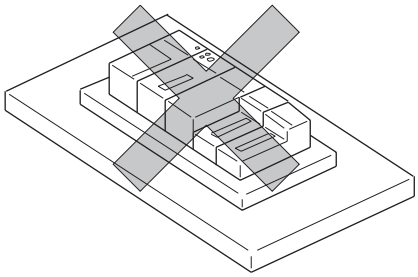

Figure8.5 Horizontal installation (not allowed)

8.5 Installation and Removal of the Base Units

How to install and remove the power supply module, CPU module, I/O module and special function module, etc. to/from the base unit are explained.

⚠ CAUTION

- Insert the module fixing projection into the fixing hole in the base unit and then tighten the module fixing screw within the specified torque.
  When no screw is tightened, even if the module is installed correctly, it may cause malfunctions, a failure or a drop of the module.
  If too tight, it may damage the screw and/or the module, resulting in a drop of the module, a short circuit or malfunctions.
- Be sure to shut off all phases of the external power supply used by the system before mounting or removing the module.
  Filure to do so may damage the module.
- Do not directly touch the conductive part or electronic components of the module.
  Doing so may cause malfunctions or a failure of the module.

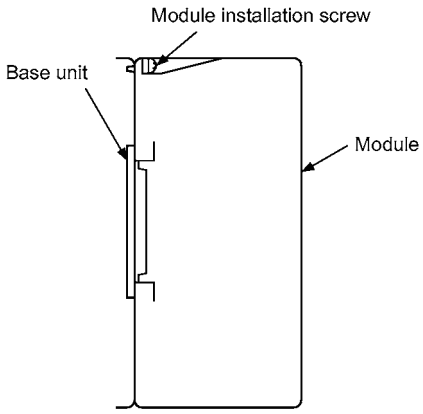

(1) Module installation
Installation procedure of the module is explained.

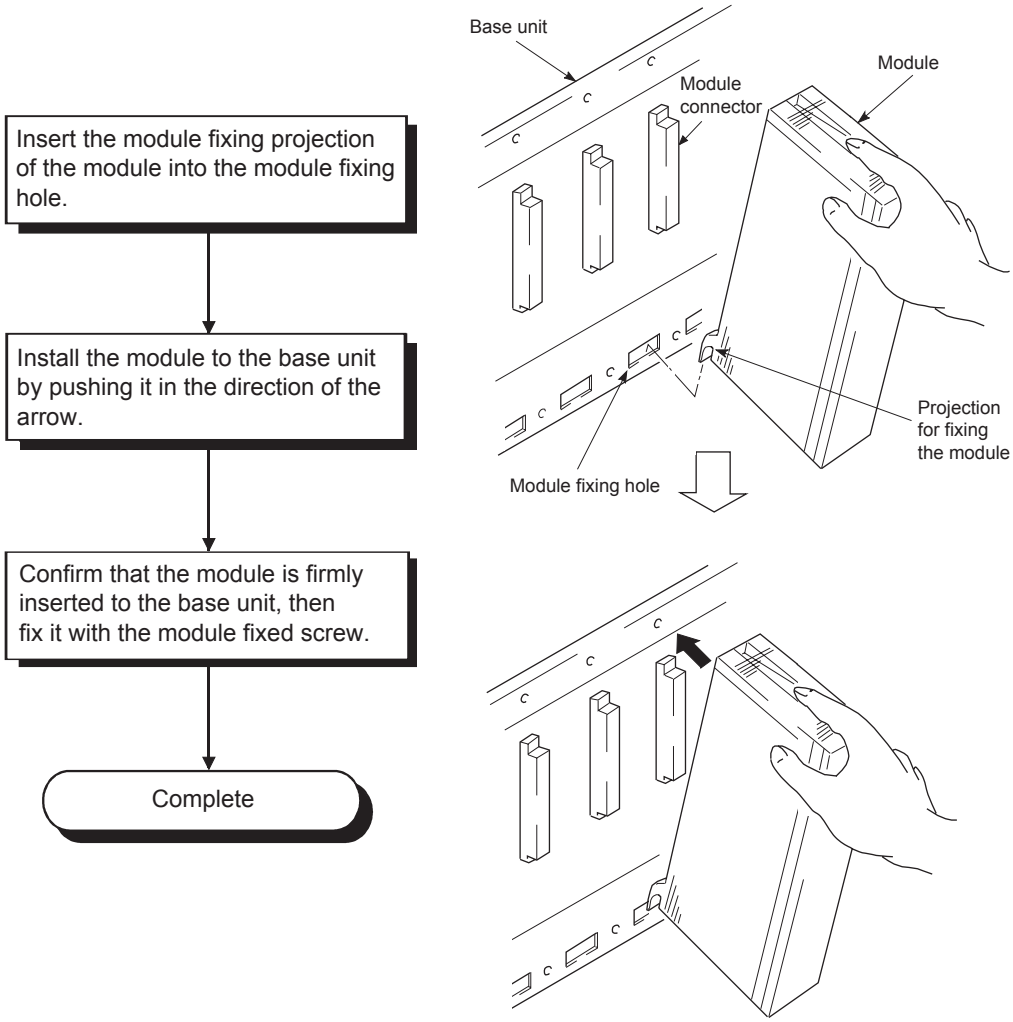

(2) Removal of the module
Removal procedure of the module is explained.

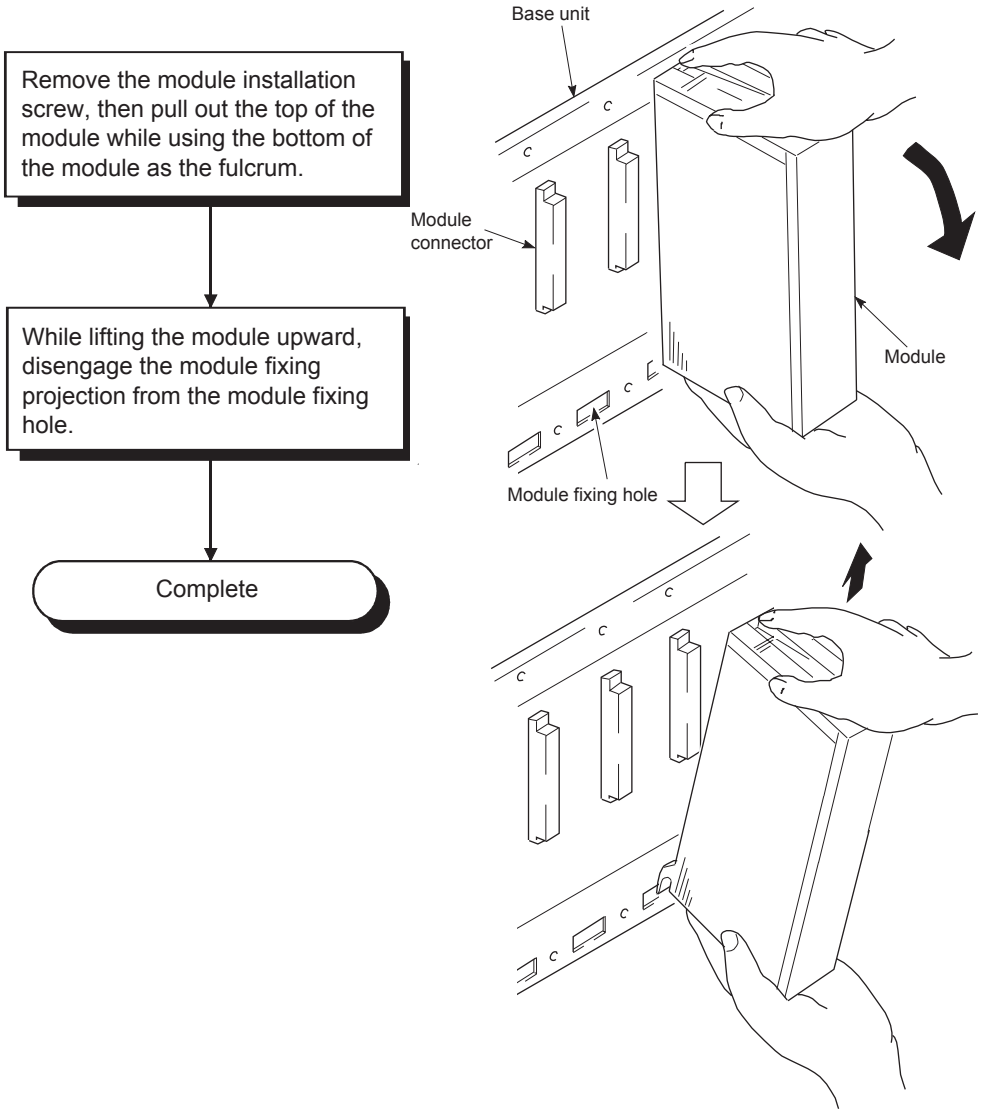

POINT
To remove the module, the module mounting screw must be removed first, then disengage the module fixing projection from the module fixing hole. If the module is forcibly removed the module fixing projection will be damaged.

8.6 Installation and Removal of the Dustproof Cover

DANGER

- When setting up the system, do not allow any empty slot on the base unit.
  If any slot is left empty, be sure to use a blank cover (A1SG60) or a dummy module (A1SG62) for it.
  When using the extension base unit, A1S52B(S1), A1S55B(S1), A1S58B(S1), attach the included dustproof cover to the module in slot 0.
  Otherwise, internal parts of the module may be flied in the short circuit test or when an overcurrent or overvoltage is accidentally applied to the external I/O section.

When A1S52B(S1), A1S55B(S1), A1S58B(S1) is used, it is necessary to install the dustproof cover, which is supplied with base to the I/O module to be installed to the left end in order to prevent intrusion of foreign material into the I/O module. Intrusion of foreign matter into the I/O module may cause breakdowns. Procedures for installing and removing the dustproof cover are described below.

(1) Installation

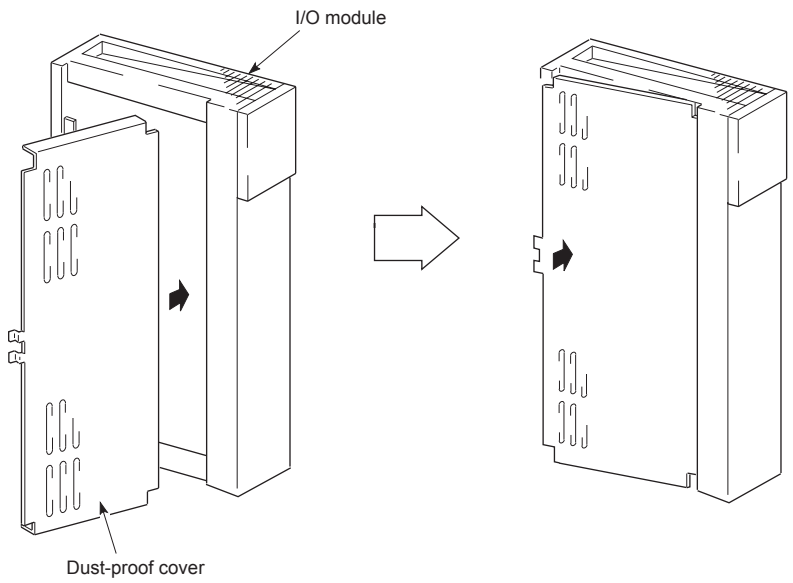

To insert the dustproof cover to the I/O module, insert the cover to the connector or terminal side first as shown in the figure, then push the cover to the I/O module side.

(2) Removal

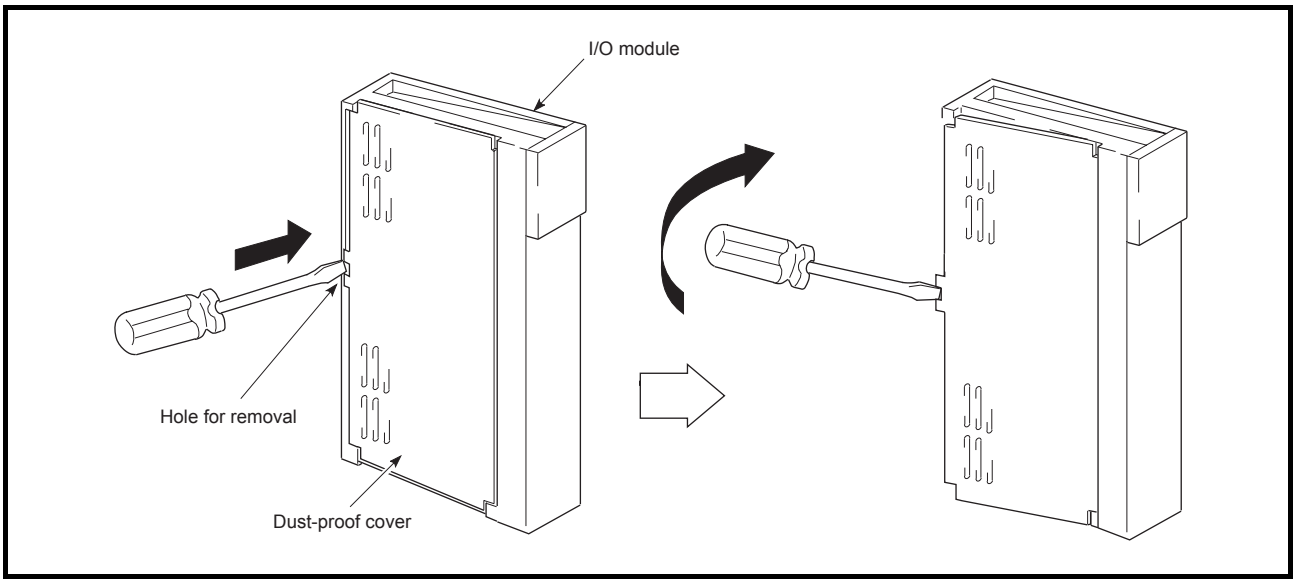

To remove the dustproof cover from the I/O module, insert the tip of a flat-tip screwdriver into the removal hole as shown in the figure, then move the screwdriver towards the rear of the module to separate the clip from the removal hole and remove the cover.

8.7 Wiring

8.7.1 Wiring instructions

Instructions for wiring the power cable and I/O wire.

DANGER

- Be sure to shut off all the phases of the external power supply used by the system before wiring.
  Failure to do so may result in an electric shock or damage of the product.
- Before energizing and operating the system after wiring, be sure to attach the terminal cover supplied with the product.
  Failure to do so may cause an electric shock.

CAUTION

- Always ground the FG and LG terminals to the protective ground connector.
  Failure to do so may cause an electric shock or malfunctions.
- Wire the module correctly after confirming the rated voltage and terminal layout.
  Connecting a power supply of a different voltage rating or incorrect wiring may cause a fire or failure.
- Do not connect multiple power supply modules to one module in parallel.
  The power supply modules may be heated, resulting in a fire or failure.
- Press, crimp or properly solder the connector for external connection with the specified tool.
  Incomplete connection may cause a short circuit, fire or malfunctions.
- Tighten terminal screws within the specified torque range.
  If the screw is too loose, it may cause a short circuit, fire or malfunctions.
  If too tight, it may damage the screw and/or the module, resulting in a drop of the module, a short circuit or malfunctions.
- Carefully prevent foreign matter such as dust or wire chips from entering the module.
  Failure to do so may cause a fire, failure or malfunctions.
- Install our PLC in a control panel for use.
  Wire the main power supply to the power supply module installed in a control panel through a distribution terminal block.
  Furthermore, the wiring and replacement of a power supply module have to be performed by a maintenance worker who acquainted with shock protection.
  (For the wiring methods, refer to Section 8.7.)

(1) Wiring power supply

(a) When voltage fluctuations are larger than the specified value, connect a constant-voltage transformer.

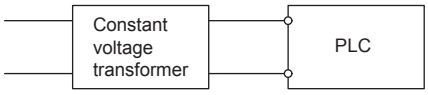

(b) Use a power supply which generates minimal noise between wires and between the PLC and ground.
If excessive noise is generated, connect an isolating transformer.

(c) When a power supply transformer or isolating transformer is employed to reduce the voltage from 200VAC to 100VAC, use one with a capacity greater than those indicated in the following table.

Power Supply Module	Transformer Capacity
A1S61PN	110VA× n
A1S62PN	110VA× n

n: Stands for the number of power supply modules.

(d) Separate the PLC's power supply line from the lines for I/O equipments and power equipments as shown below.
When there is much noise, connect an isolating transformer.

(e) Taking rated current or inrush current into consideration when wiring the power supply, be sure to connect a breaker or an external fuse that have proper blown and detection.
When using a single PLC, a 10A breaker or an external fuse are recommended for wiring protection.

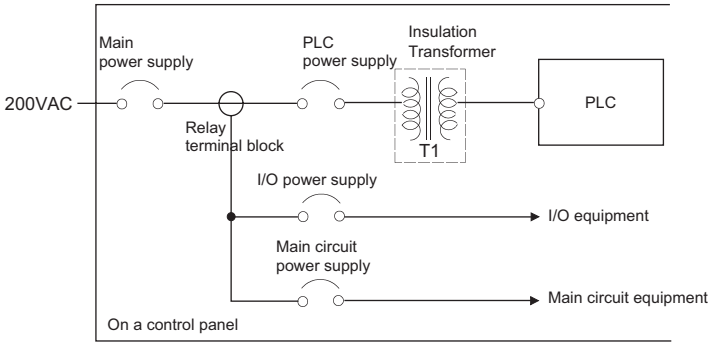

(f) Note on using the 24VDC output of the A1S62PN power supply module.

> ⚠ CAUTION
> ● Do not connect multiple power supply modules to one module in parallel.
> The power supply modules may be heated, resulting in a fire or failure.

If the 24VDC output capacity is insufficient for one power supply module, supply 24VDC from the external 24VDC power supply as shown below:

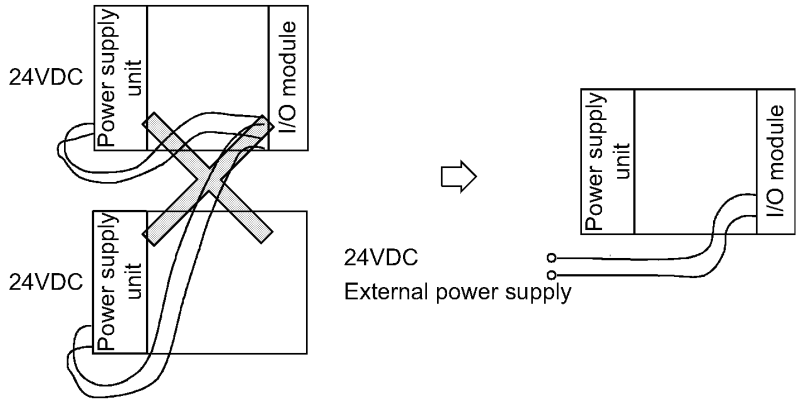

(g) 100VAC, 200VAC and 24VDC wires should be twisted as dense as possible. Connect the modules with a shortest distance.
Also, to reduce the voltage drop to the minimum, use thickest wires possible (maximum 2mm^2 (0.0031in.^{2})).

(h) Do not bind 100VAC and 24VDC wires together with main circuit (high voltage and large current) wires or I/O signal lines (including common line) nor place them near each other. Provide 100mm (3.94inch) clearance between the wires if possible.

(i) As measures against surge due to lightening, connect a surge absorber for lightening as shown below.

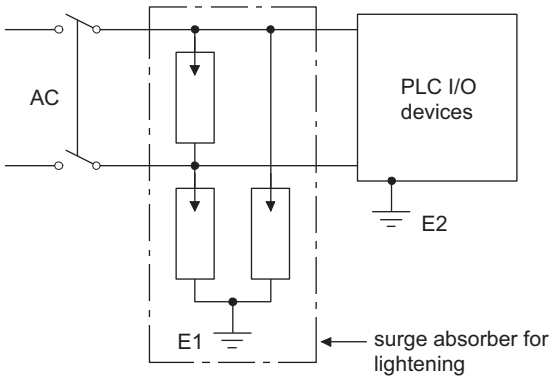

POINT
(1) Separate the ground of the surge absorber for lightening (E1) from that of the PLC (E2). (2) Select a surge absorber for lightening whose power supply voltage does not exceed the maximum allowable circuit voltage even when line voltage is maximum.

(2) Wiring I/O equipments

⚠ CAUTION	● Do not install the control lines or communication cables together with the main circuit or power lines, or bring them close to each other. Keep a distance of 100mm (3.9inch) or more between them. Failure to do so may cause malfunctions due to noise.

(a) The applicable wire size for a terminal block connector is 0.75 to 2mm^2 . It is recommended to use wire of 0.75mm^2 for easy use.
(b) Run the input line and output line away from each other.
(c) Run the I/O signal line (including common line) away from the main circuit line with high voltage or large current by more than 100mm (3.94inch).
(d) When the main circuit line and power line cannot be separated, use a batch shielding cable and ground it on the PLC side.
However, ground it on the opposite side in some cases.

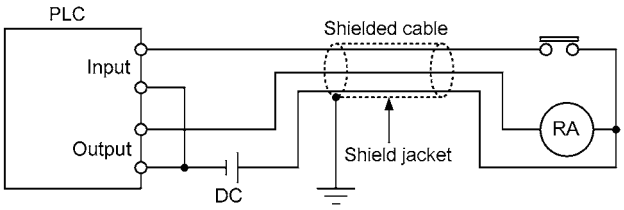

(e) When cables are run through pipes, securely ground the pipes.
(f) Separate the 24VDC I/O wires from the 100VAC and 200VAC lines.
(g) With a long distance wiring of 200m (656.2ft.) or longer, leak current due to line capacity may cause troubles.
(h) As a measure against surge due to lightning, separate the AC wiring and DC wiring and connect a surge absorber for lightning as shown in (i) of item (1).
Failure to do so increases the risk of I/O equipment failure due to lightning.

(3) Grounding

⚠ CAUTION	● Always ground the FG and LG terminals to the protective ground connector. Failure to do so may cause an electric shock or malfunctions.

(a) Carry out the independent grounding if possible.
(b) If the independent grounding is impossible, carry out the shared grounding (2) as shown below.

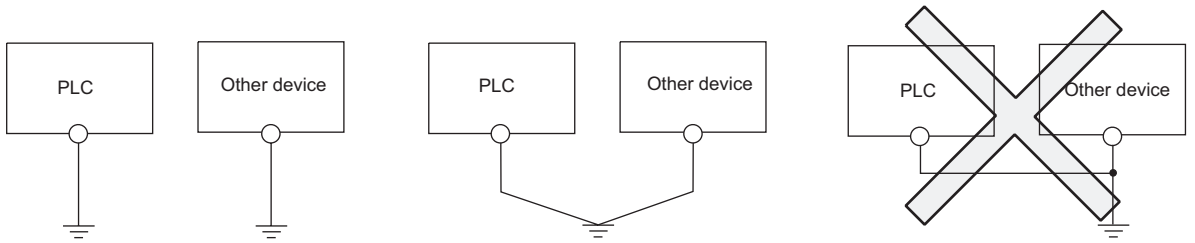

(1) Independent grounding ..... Best
(2) Shared grounding ..... Good
(3) Common grounding ..... Not allowed

(c) Use the cable of 2mm^2 (0.0031in.^{2}) or more for grounding.
Set the grounding point closer to the PLC to make the grounding cable short as possible.
(d) If a malfunction occurs due to grounding, separate either LG or FG of the base unit, the device combination, or all the connection from the grounding.

8.7.2 Wiring to module terminals

This section explains the wiring of power cables and ground wires to the main and extension bases.

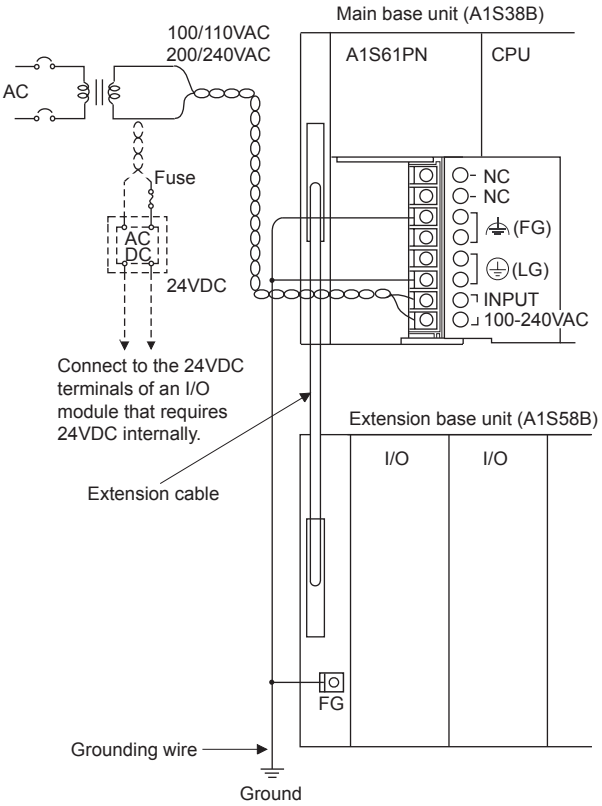

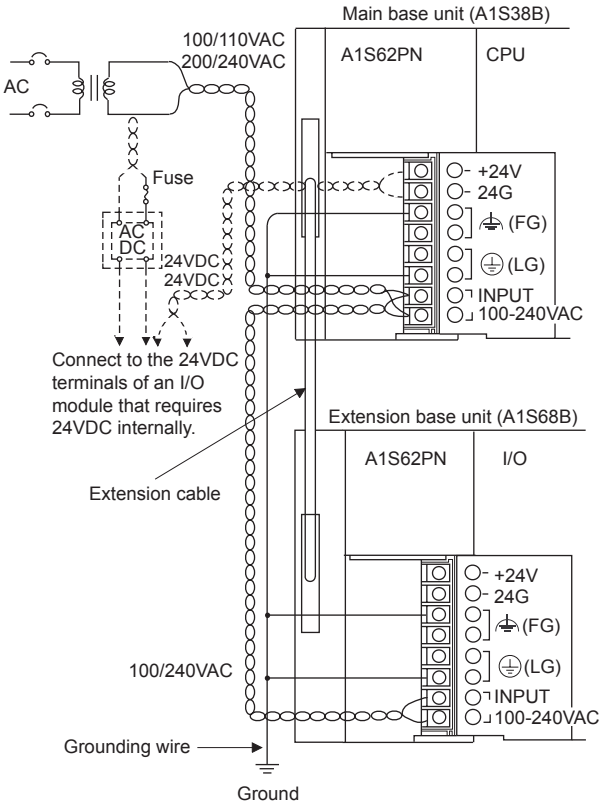

POINT

(1) Use the thickest possible (max. 2 mm^2 (14 AWG)) wires for the 100/200 VAC and 24 VDC power cables. Be sure to twist these wires starting at the connection terminals. For wiring a terminal block, be sure to use a solderless terminal. To prevent short-circuit due to loosening screws, use the solderless terminals with insulation sleeves of 0.8 mm (0.03 inch) or less thick. The number of the solderless terminals to be connected for one terminal block are limited to 2

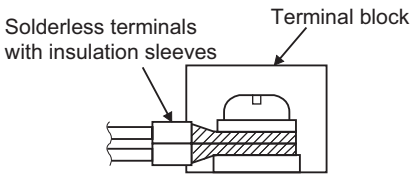

(2) Be sure to ground the LG and FG terminals. Failure to do so may cause the PLC to be susceptible to noise. Note that LG terminals include the potential as half as that of input voltage; you might get an electric shock when you touch them.

(3) A1S61PN and A1S62PN do not need to be switched as the are 100 to 240VAC wide-range.

8.8 Precautions when Connecting the Uninterruptible Power Supply (UPS)

Connect the PLC system to the uninterruptible power supply (UPS), while paying attention to the followings.

Use the on-line UPS or line interactive UPS (voltage distortion of 5% or less.)
Alternatively, use the off-line system UPS, i.e., FREQUPS-F series with serial number P or later (manufactured by Mitsubishi Electric). Example: FW-F10-03.K/0.5K
Do not use the off-line system UPS other than above.

9 EMC AND LOW VOLTAGE DIRECTIVES

The product sold in the European countries have been required by law to comply with the EMC and Low Voltage Directives of the EU Directives since 1996 and 1997, respectively. The manufacturers must confirm by self-declaration that their products meet the requirements of these directives, and put the CE mark on the products.

9.1 Requirements for Compliance with EMC Directives

The EMC Directives specifies emission and immunity criteria and requires the products to meet both of them, i.e., not to emit excessive electromagnetic interference (emission): to be immune to electromagnetic interference outside (immunity). Guidelines for complying the machinery including MELSEC-AnS series PLC with the EMC Directives are provided in Section 9.1.1 to Section 9.1.7 below.
The guidelines are created based on the requirements of the regulations and relevant standards, however, they do not guarantee that the machinery constructed according to them will not comply with the Directives. Therefore, the manufacturer of the machinery must finally determine how to make it comply with the EMC Directives: if it is actually compliant with the EMC Directives.

9.1.1 EMC standards

Standards related to EMC directive are described below.

Specifications	Test Item	Test Description	Standard Values
EN61000-6-4 (2001)	EN55011 *2 Radiated noise	Measure the emission released by the product.	30 M-230 M Hz QP : 30 dB μV/m (30 m measurement) *1 230 M-1000 M Hz QP : 30 dB μV/m (30 m measurement) *1
	EN55011 *2 Conduction noise	Measure the emission released by the product to the power line.	150k-500kHz QP: 79dB, Mean : 66 dB *1 500 K-30MHz QP : 73dB, Mean: 60 dB*1
EN61131-2/A12 (2000)	EN61000-4-2*2 Static electricity immunity	Immunity test by applying static electricity to the device enclosure.	4kV contact discharge 8kV air discharge
	EN61000-4-4*2 First transient burst noise	Immunity test by applying burst noise to the power line and signal line.	2kV Power line 1kV Signal line
	EN61000-4-12*2 Damped oscillatory wave	Immunity test in which a damped oscillatory wave is superimposed on the power line.	1kV
	EN61000-4-3*2 Radiated electromagnetic field	Immunity test by applying aradiated electric field to the product.	10V/m, 26-1000MHz
EN61000-6-2 (2001)	EN61000-4-6*2 Conduction noise	Immunity test by inducting an electromagnetic field in the power line and signal line.	10V, 0.15-80MHz

*1 QP: Quasi-peak value, Mean : Average value
*2 The PLC is an open type device (device installed to another device) and must be installed in a conductive control panel. The tests for the corresponding items were performed while the PLC was installed inside the control panel.

9.1.2 Installation instructions for EMC directive

The PLC is open equipment and must be installed within a control panel for use.* This not only ensures safety but also ensues effective shielding of PLC-generated electromagnetic noise.

* Also, each network remote station needs to be installed inside the control panel.
However, the waterproof type remote station can be installed outside the control panel.

(1) Control panel
- (a) Use a conductive control panel.
- (b) When attaching the control panel's top plate or base plate, mask painting and weld so that good surface contact can be made between the cabinet and plate.
- (c) To ensure good electrical contact with the control panel, mask the paint on the installation bolts of the inner plate in the control panel so that contact between surfaces can be ensured over the widest possible area.
- (d) Earth the control panel with a thick wire so that a low impedance connection to ground can be ensured even at high frequencies.
- (e) Holes made in the control panel must be 10cm (3.94inch) diameter or less. If the holes are 10cm (3.94inch) or larger, radio wave may be emitted.

(2) Connection of power cable and ground wires
Earthing and power supply cable for the PLC system must be connected as described below.
- (a) Provide a grounding point near the power supply module. Earth the power supply's LG and FG terminals (LG : Line Ground, FG : Frame Ground) with the thickest and shortest wire possible. (The wire length must be 30cm (11.18inch) or shorter.) The LG and FG terminals function is to pass the noise generated in the PLC system to the ground, so an impedance that is as low as possible must be ensured.
  In addition, make sure to wire the ground cable short as the wires are used to relieve the noise, the wire itself carries large noise content and thus short wiring means that the wire is prevented from acting as an antenna.
- (b) The ground wire led from the grounding point must be twisted with the power cables. By twisting with the ground wire, noise flowing from the power cables can be relieved to the earthing. However, if a filter is installed on the power cables, the wires and the ground wire may not need to be twisted.

9.1.3 Cables

The cables pulled out of the control panel contain a high frequency noise component. On the outside of the control panel, therefore, they serve as antennas to emit noise. Ensure to use shielded cables for the cables, which are connected to the I/O modules, special function modules and those pulled out to outside of the control panel.
Mounting ferrite core is not required except some types of CPU however, noise emanated via the cable can be restrained using it.
The use of a shielded cable also increases noise resistance. The signal lines (including common line) connected to the PLC I/O modules and special function modules use shielded cables to assure noise resistance, as a condition, standardized on EN61131-2/A12(2000). If a shielded cable is not used or not earthed correctly, the noise resistance will be less than the specified value.

(1) Earthing of shielded cables
   (a) Earth the shield of the shielded cable as near the control panel as possible taking care so that the earthed cables are not induced electromagnetically by the cable to be earthed.
   (b) Take appropriate measures so that the shield section of the shielded cable from which the outer sheath cover was partly removed for exposure is earthed to the control panel on an increased contact surface. A clamp may also be used as shown in the figure below. In this case, however, apply a cover to the painted inner wall surface of the control panel which comes in contact with the clamp.

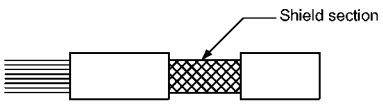

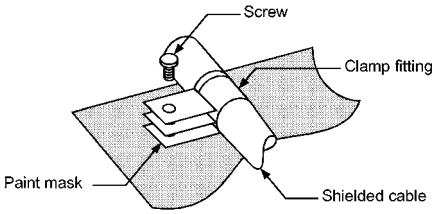

Note) The method of earthing by soldering a wire onto the shield section of the shielded cable as shown below is not recommended. The high frequency impedance will increase and the shield will be ineffective.

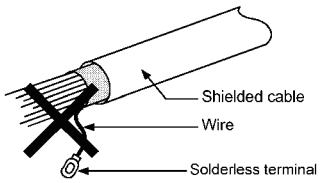

(2) MELSECNET (II) and MELSECNET/10 modules

(a) Use a double-shielded coaxial cable (MITSUBISHI CABLE INDUSTRIES, LTD.: 5C-2V-CCY) for the MELSECNET modules (such as A1SJ71AR21, A1SJ71LR21, A1SJ71BR11) which uses coaxial cables. Noise in the range of 30 MHz or higher in radiated noise can be suppressed by the use of double-shielded coaxial cables. Earth the double-shielded coaxial cable by connecting its outer shield to the ground.

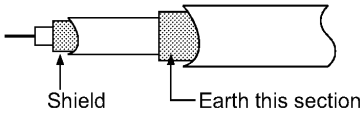

Refer to (1) for the earthing of the shield.

(b) Ensure to attach a ferrite core to the double-shielded coaxial cable connected to the MELSECNET module. In addition, position the ferrite core on each cable near the outlet of the control panel. TDK-make ZCAT3035 ferrite core is recommended.

(3) Ethernet module

Precautions to be followed when AUI cables, twisted pair cables and coaxial cables are used are described below.

(a) Ensure to earth also the AUI cables*1 connected to the 10BASE5 connectors of the A1SJ71E71-B5. Because the AUI cable is of the shielded type, as shown in the figure below, partly remove the outer cover of it, and earth the exposed shield section to the ground on the widest contact surface.

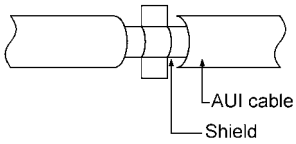

(b) Use shielded twisted pair cables as the twisted pair cables*1 connected to the 10BASE-T connectors. For the shielded twisted pair cables, strip part of the outer cover and earth the exposed shield section to the ground on the widest contact surface as shown below.

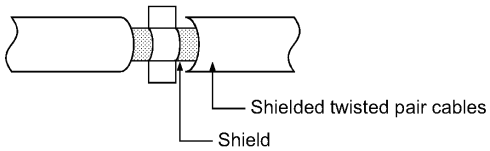

Refer to (1) for the earthing of the shield.

*1 Make sure to install a ferrite core for the cable.
As a ferrite core, ZCAT2032 manufactured by TDK is recommended.

(c) Always use double-shielded coaxial cables as the coaxial cables*2 connected to the 10BASE2 connectors. Earth the double-shielded coaxial cable by connecting its outer shield to the ground.

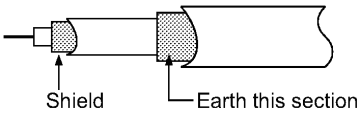

Refer to (1) for the earthing of the shield.

*2 Make sure to install a ferrite core for the cable.
As a ferrite core, ZCAT3035 manufactured by TDK is recommended.

Ethernet is the registered trademark of XEROX, Co.,LTD

(4) I/O and other communication cables
For the I/O signal lines (including common line) and other communication cables (RS-232, RS-422, etc), if extracted to the outside of the control panel, also ensure to earth the shield section of these lines and cables in the same manner as in item (1) above.

(5) Positioning Modules
Precautions to be followed when the machinery conforming to the EMC Directive is configured using the A1SD75P□-S3 are described below.

(a) When wiring with a 2m (6.56ft.) or less cable
- Ground the shield section of the external wiring cable with the cable clamp. (Ground the shield at the closest location to the A1SD75 external wiring connector.)
- Wire the external wiring cable to the drive unit and external device with the minimum distance of cable.
- Install the drive unit in the same panel.

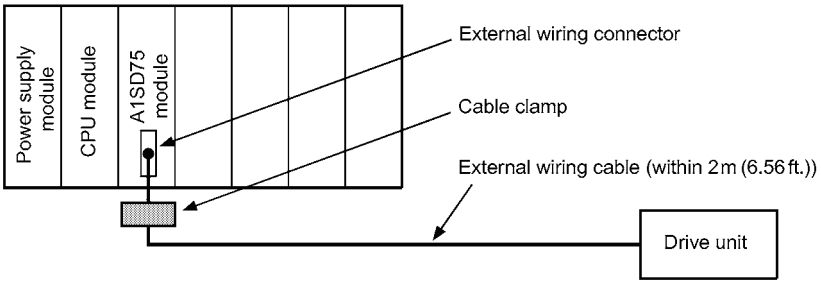

(b) When wiring with cable that exceeds 2m (6.56ft.), but is 10m (32.81ft.) or less
- Ground the shield section of the external wiring cable with the cable clamp. (Ground the shield at the closest location to the A1SD75 external wiring connector.)
- Install a ferrite core.
- Wire the external wiring cable to the drive unit and external device with the minimum distance of cable.

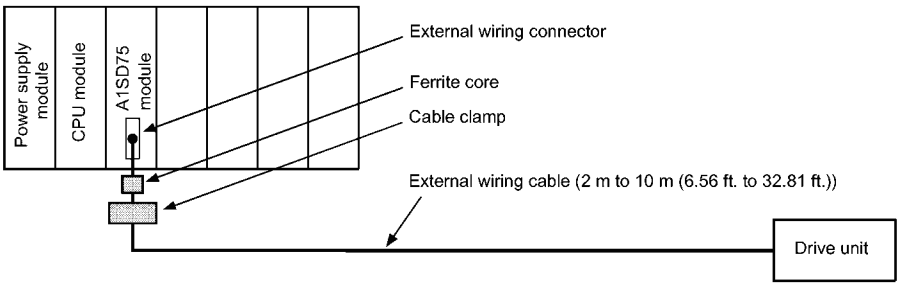

(c) Ferrite core and cable clamp types and required quantities
- Cable clamp
  Type : AD75CK (Manufactured by Mitsubishi Electric)
- Ferrite core
  Type : ZCAT3035-1330 (TDK ferrite core)
  Contact: TDK Corporation
- Required quantity

Cable length	Prepared part	Required Qty		
		1 axis	2 axes	3 axes
Within 2m (6.56ft.)	AD75CK	1	1	1
2m (6.56ft.) to 10m (32.81ft.)	AD75CK	1	1	1
	ZCAT3035-1330	1	2	3

(d) Cable clamp mounting position

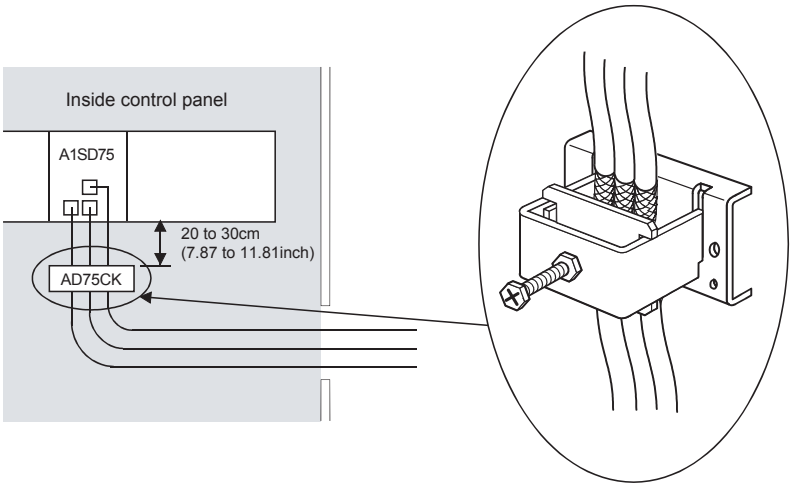

(6) CC-Link Module

(a) Be sure to ground the cable shield that is connected to the CC-Link module close to the exit of control panel or to any of the CC-Link stations within 30cm (11.81inch) from the module or stations.
The CC-Link dedicated cable is a shielded cable. As shown in the illustration below, remove a portion of the outer covering and ground as large a surface area of the exposed shield part as possible.

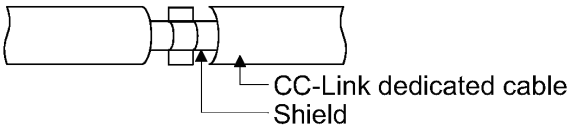

(b) Always use the specified CC-Link dedicated cable.

(c) The CC-Link module, the CC-Link stations and the FG line inside the control panel should be connected the FG terminal as shown in the diagram below.

[Simplified diagram]

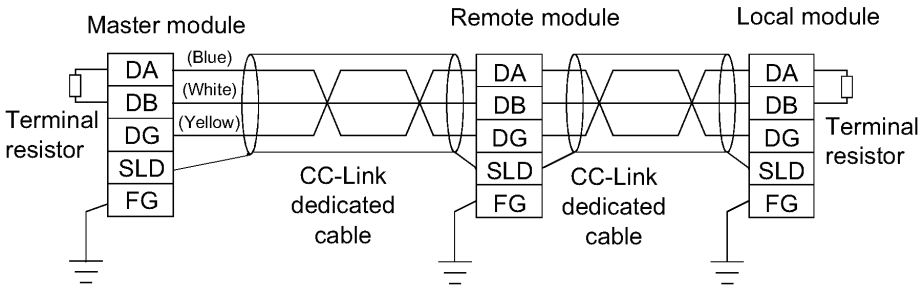

(d) Power line connecting to the external power supply terminal (compliant with I/O power port of CE standard) should be 30m (98.43 ft.) or less. Power line connecting to module power supply terminal (compliant with I/O power port of CE standard) should be 10m (32.81 ft.) or less.

(e) A power line connecting to the analog input of the following modules should be 30cm or less.
- AJ65BT-64RD3
- AJ65BT-64RD4
- AJ65BT-68TD

(7) Measures against static electricity
When using an insulation displacement connector without connector cover, a connected cable for the connector is thin in applicable wire size and coating. Therefore, note that the module may cause an electric discharge failure.
As measures against the failure, using pressure-displacement type connector whose applicable wire size is thick or soldering type connector is recommended.

9.1.4 Power supply module

The precautions required for each power supply module are described below. Always observe the items noted as precautions.

Model	Precautions
A1S61PN, A1S62PN	Make sure to short-circuit and ground the LG and FG terminals.*2
A1S63P *1	Use the 24VDC panel power supply equipment conforming to the EU Directive.

*1 If sufficient filter circuitry is built into the 24VDC external power supply module, the noise generated by A1S63P will be absorbed by that filter circuit, so a line filter may not be required. Filtering circuitry of version F or later of A1S63P is improved so that a external line filter is not required.

*2 To ensure the compliance with CE (EN6111-21/A11), make sure to short-circuit the LG and FG terminals using a wire of 6 to 7cm (2.36 to 2.76inch).

9.1.5 Ferrite core

Use of ferrite cores is effective in reducing the conduction noise in the band of about 10MHz and radiated noise in 30 to 100MHz band.
It is recommended to attach ferrite cores when the shield of the shielded cable coming out of control panel does not work effectively, or when emission of the conduction noise from the power supply line has to be suppressed.*1The ferrite cores used in our tests are TDK's ZCAT3035.
It should be noted that the ferrite cores should be fitted to the cables in the position immediately before they are pulled out of the enclosure. If the fitting position is improper, the ferrite will not produce any effect.

*1 To response with CE(EN61131-2/A12), make sure to mount 2 or more ferrite cores onto the power supply line.
The mounting position should be as near the power supply module as possible.
Use the following ferrite core.
・Ferrite core
Type : ZCAT2235-1030A (TDK ferrite core)
Contact: TDK Corporation

9.1.6 Noise filter (power supply line filter)

A noise filter is a component which has an effect on conducted noise. With the exception of some models, it is not required to fit the noise filter to the power supply line, but fitting it can further suppress noise. (The noise filter has the effect of reducing conducted noise of 10 M Hz or less.)Use any of the following noise filters (double π type filters) or equivalent.

Model name	FN343-3/01	FN660-6/06	ZHC2203-11
Manufacturer	SCHAFFNER	SCHAFFNER	TDK
Rated current	3A	6A	3A
Rated voltage	250V		

The precautions required when installing a noise filter are described below.

(1) Do not bundle the wires on the input side and output side of the noise filter. When bundled, the output side noise will be induced into the input side wires from which the noise was filtered.

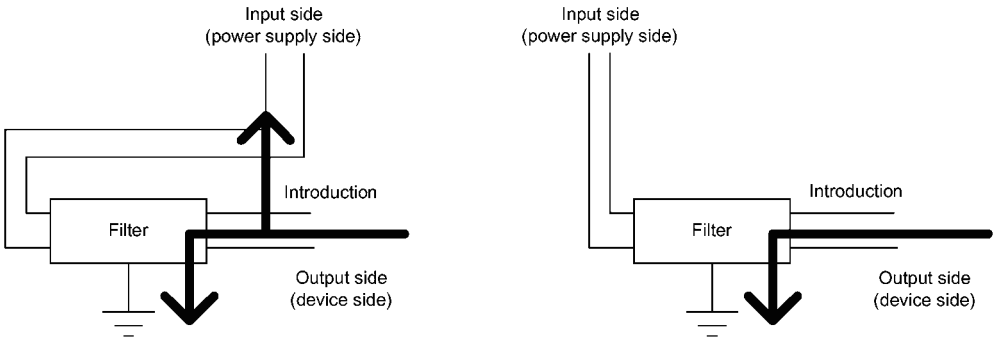

(a) The noise will be induced when the input and output wires are bundled.

(b) Separate and lay the input and output wires.

(2) Earth the noise filter ground terminal to the control panel with the shortest wire possible (approx. 10cm (3.94inch)).

9.1.7 Power line for external power supply terminal

The power line connecting to the external power supply terminal of the module should be 30m (98.43 ft.) or less.

9.2 Requirements for Compliance with Low Voltage Directives

The Low Voltage Directives apply to the electrical equipment operating from 50 to 1000VAC or 75 to 1500VDC; the manufacturer must ensure the adequate safety of the equipment.
Guidelines for installation and wiring of MELSEC-AnS series PLC are provided in 9.2.1 to Section 9.2.7 for the purpose of compliance with the EMC Directives.
The guidelines are created based on the requirements of the regulations and relevant standards, however, they do not guarantee that the machinery constructed according to them will comply with the Directives. Therefore, the manufacturer of the machinery must finally determine how to make it comply with the EMC Directives: if it is actually compliant with the EMC Directives.

9.2.1 Standard applied for MELSEC-AnS series PLC

The standard applied for MELSEC-AnS series PLC series is EN61010-1 safety of devices used in measurement rooms, control rooms, or laboratories.
For the modules which operate with the rated voltage of 50VAC/75VDC or above, we have developed new models that conform to the above standard.
For the modules which operate with the rated voltage under 50VAC/75VDC, the conventional models can be used, because they are out of the low voltage directive application range.

9.2.2 Precautions when using the MELSEC-AnS series PLC

Module selection

(1) Power supply module
For a power supply module with rated input voltage of 100/200VAC, select a model in which the internal part between the first order and second order is intensively insulated, because it generates hazardous voltage (voltage of 42.4V or more at the peak) area.
For a power supply module with 24VDC rated input, a conventional model can be used.

(2) I/O module
For I/O module with rated I/O voltage of 100/200VAC, select a model in which the internal area between the first order and second order is intensively insulated, because it has hazardous voltage area.
For I/O module with 24VDC rated input, a conventional model can be used.

(3) CPU module, memory cassette, base unit
Conventional models can be used for these modules, because they only have a 5VDC circuit inside.

(4) Special function module
Conventional models can be used for the special function modules including analog module, network module, and positioning module, because the rated voltage is 24VDC or smaller.

(5) Display device
Use the CE-marked product.

9.2.3 Power supply

The insulation specification of the power supply module was designed assuming installation category II. Be sure to use the installation category II power supply to the PLC. The installation category indicates the durability level against surge voltage generated by a thunderbolt. Category I has the lowest durability; category IV has the highest durability.

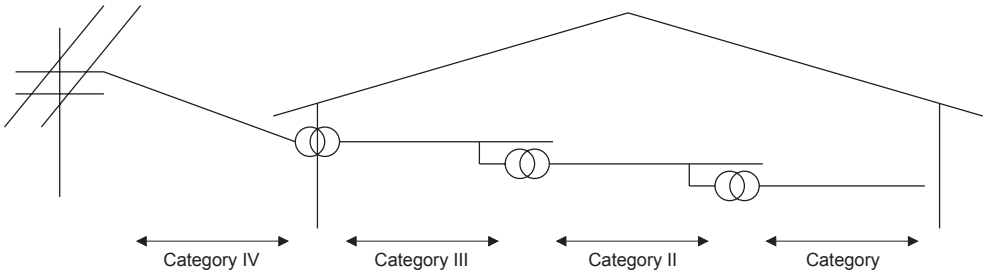

Figure9.1: Installation Category

Category II indicates a power supply whose voltage has been reduced by two or more levels of isolating transformers from the public power distribution.

9.2.4 Control panel

Because the PLC is an open device (a device designed to be stored within another device), be sure to use it after storing in the control panel.*

* Also, each network remote station needs to be installed inside the control panel. However, the waterproof type remote station can be installed outside the control panel.

(1) Shock protection
In order to prevent persons who are not familiar with the electric facility such as the operators from electric shocks, the control panel must have the following functions :
(a) The control panel must be equipped with a lock so that only the personnel who has studied about the electric facility and have enough knowledge can open it.
(b) The control panel must have a structure which automatically stops the power supply when the box is opened.
(c) For electric shock protection, use IP20 or greater control panel.

(2) Dustproof and waterproof features
The control panel also has the dustproof and waterproof functions. Insufficient dustproof and waterproof features lower the insulation withstand voltage, resulting in insulation destruction. The insulation in our PLC is designed to cope with the pollution level 2, so use in an environment with pollustion level 2 or below.

Pollution level 1: An environment where the air is dry and conductive dust does not exist.
Pollution level 2: An environment where conductive dust does not usually exist, but occasional temporary conductivity occurs due to the accumulated dust. Generally, this is the level for inside the control panel equivalent to IP54 in a control room or on the floor of a typical factory.
Pollution level 3: An environment where conductive dust exits and conductivity may be generated due to the accumulated dust.
An environment for a typical factory floor.
Pollution level 4: Continuous conductivity may occur due to rain, snow, etc. An outdoor environment.

As shown above, the PLC can realize the pollution level 2 when stored in a control panel equivalent to IP54.

9.2.5 Module installation

(1) Installing modules contiguously
In AnS series PLCs, the left side of each I/O module is left open. When installing an I/O module to the base, do not make any empty slots between any two modules. If there is an empty slot on the left side of a module with 100/200VAC rating, the circuit board which contains the hazardous voltage circuit becomes bare. When it is unavoidable to make an empty slot, be sure to install the blank module (A1SG60).
When using the A1S5□B(S1) extension base with no power supply, attach the cover packaged with the extension base to the side of the leftmost module.

9.2.6 Grounding

There are two kinds of ground terminals as shown below. Either ground terminal must be used grounded.
Be sure to ground the protective grounding for the safety reasons.

Protective grounding ⏚ : Maintains the safety of the PLC and improves the noise resistance.
Functional grounding : Improves the noise resistance.

9.2.7 External wiring

(1) Module power supply and external power supply
For the remote module which requires 24VDC as module power supply, the 5/12/24/48VDC I/O module, and the special function module which requires the external power supply, use the 5/12/24/48VDC circuit which is doubly insulated from the hazardous voltage circuit or use the power supply whose insulation is reinforced.

(2) External devices
When a device with a hazardous voltage circuit is externally connected to the PLC, use a model whose circuit section of the interface to the PLC is intensively insulated from the hazardous voltage circuit.

(3) Intensive insulation
Intensive insulation refers to the insulation with the dielectric withstand voltage shown in the following table.

Intensive Insulation Withstand Voltage (Installation Category II, source : IEC664)

Rated voltage of hazardous voltage area	Surge withstand voltage (1.2/50μs)
150VAC or below	2500V
300VAC or below	4000V

10 MAINTENANCE AND INSPECTION

DANGER

- Do not touch any terminal during power distribution.
  Doing so may cause an electric shock.
- Properly connect batteries.
  Do not charge, disassemble, heat or throw them into the fire and do not make them short-circuited and soldered. Incorrect battery handling may cause personal injuries or a fire due to exothermic heat, burst and/or ignition.
- Be sure to shut off all phases of the external power supply used by the system before cleaning or retightening the terminal screws or module mounting screws.
  Failure to do so may result in an electric shock.
  If they are too loose, it may cause a short circuit or malfunctions.
  If too tight, it may damage the screw and/or module, resulting in a drop of the module, a short circuit or malfunctions.

CAUTION

- When performing online operations (especially, program modification, forced output or operating status change) by connecting a peripheral device to the running CPU module, read the manual carefully and ensure the safety.
  Incorrect operation will cause mechanical damage or accidents.
- Do not disassemble or modify each of modules.
  Doing so may cause failure, malfunctions, personal injuries and/or a fire.
- When using a wireless communication device such as a mobile phone, keep a distance of 25cm (9.84inch) or more from the PLC in all directions.
  Failure to do so may cause malfunctions.
- Be sure to shut off all phases of the external power supply used by the system before mounting or removing the module.
  Failure to do so may result in failure or malfunctions of the module.
- Do not drop or apply any impact to the battery.
  Doing so may damage the battery, resulting in electrolyte spillage inside the battery.
  If any impact has been applied, discard the battery and never use it.
- Before handling modules, touch a grounded metal object to discharge the static electricity from the human body.
  Failure to do so may cause failure or malfunctions of the module.

In order to use the PLC always in good condition, conducting daily and periodical maintenance/inspection on the following items are strongly recommended.

10.1 Daily Inspection

Dairy inspection items recommended are shown in Table 10.1.

Table 10.1 Dairy inspection

Item	Check item		Content of inspection	Judgement	Action
1	Installation condition of the base unit		Confirm if mounting screws are not loose or cover is not detached.	It is installed securely.	Retighten the screw.
2	Installation condition of the I/O modules		Confirm if the module mounting screw is firmly tightened.	The module mounting screws are firmly tightened.	Tighten the module mounting screw firmly.
3	Connection conditions		Loosening of terminal screw	No loosening.	Retighten the terminal screw.
			Proximity of solderless terminals	There is an appropriate distance.	Correct the distance.
			Connector areas of extension cable	No loosening at connectors.	Retighten the connector fixing screw.
4	LEDs on the main module	POWER LED	Confirm it is ON.	The LED is ON. (Faulty if it is OFF.)	Per Section 11.2.2.
		"RUN" LED	Confirm it is ON in the "RUN" state.	The LED is ON. (Faulty if it is OFF or flickering.)	Section 11.2.3 Per Section 11.2.4.
		"ERROR" LED	Confirm it is ON at error occurrence.	The LED is OFF. (ON when error has occurred.)	Section 11.2.5 Per Section 11.2.6.
		Input LED	Confirm if it correctly turns on and off.	The LED is ON when input is ON, and OFF when input is OFF. (Faulty other than the above.)	Per Section 11.4.1.
		Output LED	Confirm if it correctly turns on and off.	The LED is ON when output is ON, and OFF when output is OFF. (Faulty other than the above.)	Per Section 11.4.2.

10.2 Periodic Inspection

Inspection on items shown below should be conducted once or twice every six months to a year. Conduct the inspection when the equipment is moved or modified, or wiring is changed.

Table 10.2 Periodic inspection

Item	Check item		Content of inspection	Judgement	Action
1	Ambient environment	Ambient temperature	Measure with temperature and humidity gauge. Measure presence of corrosive gasses.	0 to 55℃	When used in a panel, temperature inside the panel is the ambient temperature.
		Ambient humidity		10 to 90%RH	
		Atmosphere		There is no corrosive gas present.	
2	Line voltage check		Measure voltage between 100/200VAC terminals.	85 to 264VAC	Change the power supply.
3	Installation condition	Loosening, backlash	Test by moving the module.	Must be installed solidly.	Retighten the screw.
		Adhesion of dirt or foreign matters	Visual inspection	No adhesion.	Remove and clean.
4	Connection conditions	Loosening of terminal screw	Retighten with a screwdriver.	No loosening.	Retighten.
		Proximity of solderless terminals	Visual inspection	There is an appropriate distance.	Correct the distance.
		Loosening of connector	Visual inspection	No loosening.	Retighten the connector fixing screw.
5	Battery		Confirm M9006 or M9007 is OFF with a peripheral device in the monitoring mode.	(Preventive maintenance)	Even when there is no low-battery display, replace if specified life is exceeded.

10.3 Battery Replacement

DANGER

- Properly connect batteries. Do not charge, disassemble, heat or throw them into the fire and do not make them short-circuited and soldered.
  Incorrect battery handling may cause personal injuries or a fire due to exothermic heat, burst and/or ignition.

M9006 or M9007 is turned ON when voltage of the battery for backing up programs and power failure compensation function drops. Even though programs and contents of power failure compensation function are not erased immediately when these special relays become ON, the contents could be erased if the ON-status of the special relay fails to be recognized.
Replace the battery while the total period of power failure is less than shown in Table 10.3 from when the M9006 or M9007 is turned ON.
Yardstick for battery life and the specifics of replacement are explained below.

10.3.1 Battery life

The battery life is shown in Table 10.3.

Table10.3 Battery life

CPU model name	Battery life (total power failure time) [Hr]		
	Guaranteed value (MIN)	Actual value (TYP)	After M9006 or M9007 turns ON
A2USHCPU-S1 A2USCPU A2USCPU-S1 A2ASCPU A2ASCPU-S1 A2ASCPU-S30	3600	9000	168

* Actual value indicates a rough average value and guaranteed value indicates the minimum value.

Yardsticks for preventive maintenance are as follows:

[1] Replace in 4 to 5 years even when the total power failure time is less than the guaranteed value shown in the table above.

[2] Replace when the total power failure time exceeds the guaranteed value shown in the table above and the M9006 is ON.

POINT

(1) Switch batteries regularly in case that battery hours (total power failure time) exceed guaranteed values.
(2) When the battery hours (total power failure time) exceed the guaranteed value, perform ROM operation to protect a program in case that the battery dies at PLC power supply OFF, or back up a program and data within specified time as shown in the table 10.3 after M9006 (battery low) is ON.
(3) When a PLC power supply is ON or CPU module reset is cancelled, a CPU module reviews the status of data below, and initializes all the data if detecting an error.
- Breakdown history
- Latch data (latch relay (L), latch setting range device set in a parameter)
- Sampling trace data
- Status latch data
- Special relay M9102 (SFC program continual start)

10.3.2 Battery replacement procedure

Replace the battery according to the following procedure when life of the battery is over. Even when the battery is removed memory is backed up by the capacitor for a while. However, if replacement takes longer than the guaranteed value shown in Table 10.4, the content of the memory may be erased, so replace the battery quickly.

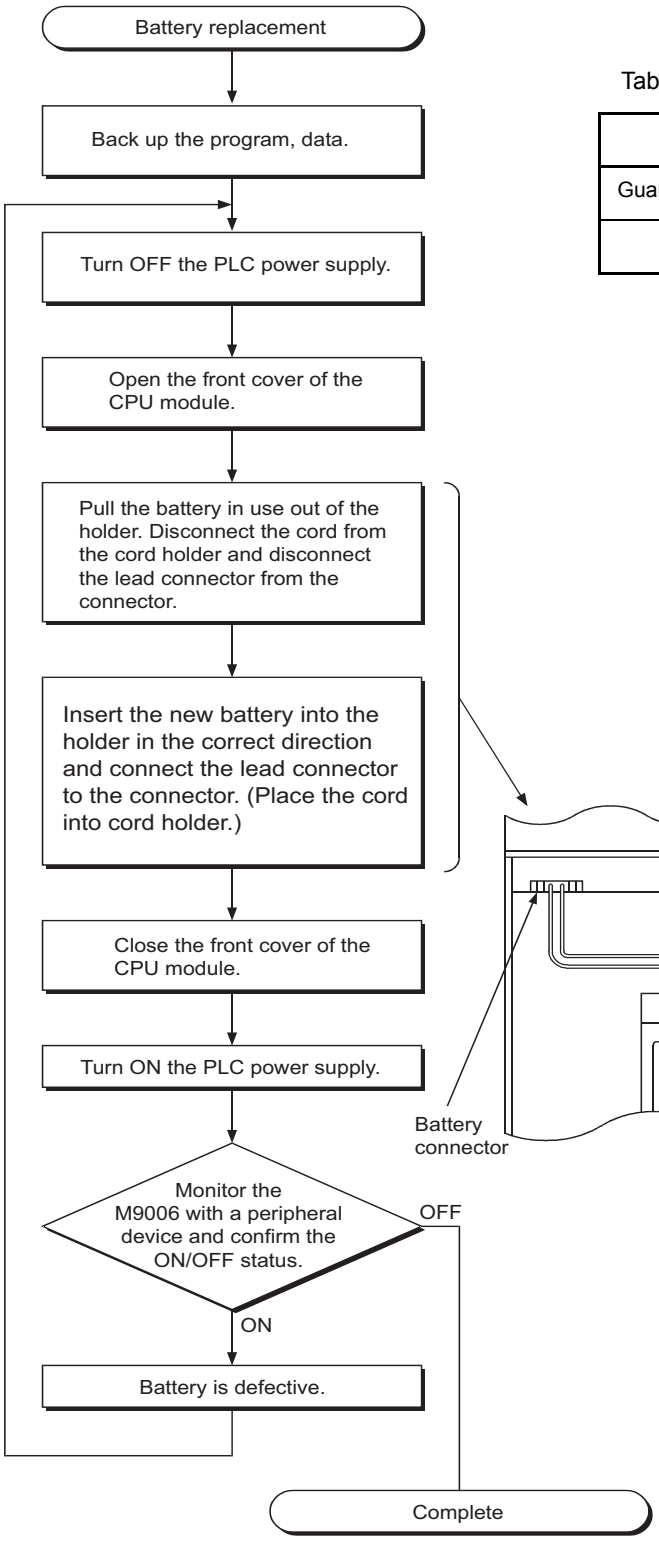

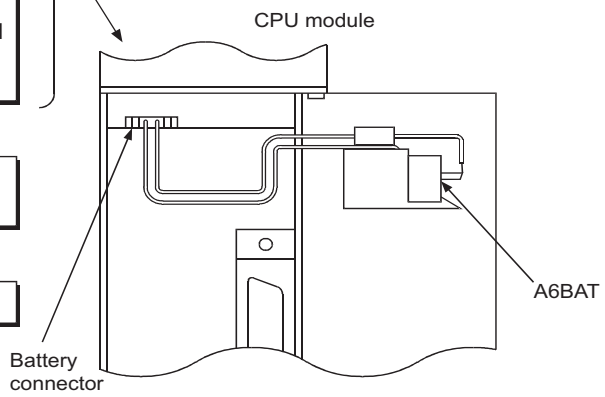

Table 10.4 Period backed up by the capacitor

Period backed up by the capacitor [min]	
Guaranteed value (MIN)	Actual value (TYP)
5	15

11 TROUBLESHOOTING

The description, cause determination, and corrective actions of each error which may occur during system usage are described.

11.1 Fundamentals of Troubleshooting

Besides using obviously highly-reliable devices to increase system reliability, it is an important point to quickly start up the system again when an error occurs.
In order to quickly start up the system, find the cause of the problem and resolve it. There are the following three basic points to be aware of when performing troubleshooting.

(1) Visual confirmation
Confirm the following points:
(a) Machine operation (stop status and operation status)
(b) Power supply ON/OFF
(c) I/O equipment status
(d) Wiring status (I/O wires and cable)
(e) Display status of each display indicator (POWER LED, RUN LED, ERROR LED, I/O LED, etc.)
(f) Status of each setting switch (extension base, power failure compensation, etc.)

After confirming (a) to (f), connect a peripheral device and observe the operation status of the PLC and program contents.

(2) Error confirmation
Observe how the error changes by performing the following operations:
(a) Set the RUN/STOP key switch to "STOP."
(b) Reset using the RUN/STOP key switch.
(c) Turn ON/OFF the power supply.

(3) Narrow down the range
By performing the (1) and (2) above, assume the faulty area in the following:
(a) PLC or external?
(b) I/O module or others?
(c) Sequence program?

11.2 Troubleshooting

The error definition determination method, error definition corresponding to the error code, and corrective actions are described.

11.2.1 Troubleshooting procedure

The error definitions are described by events.

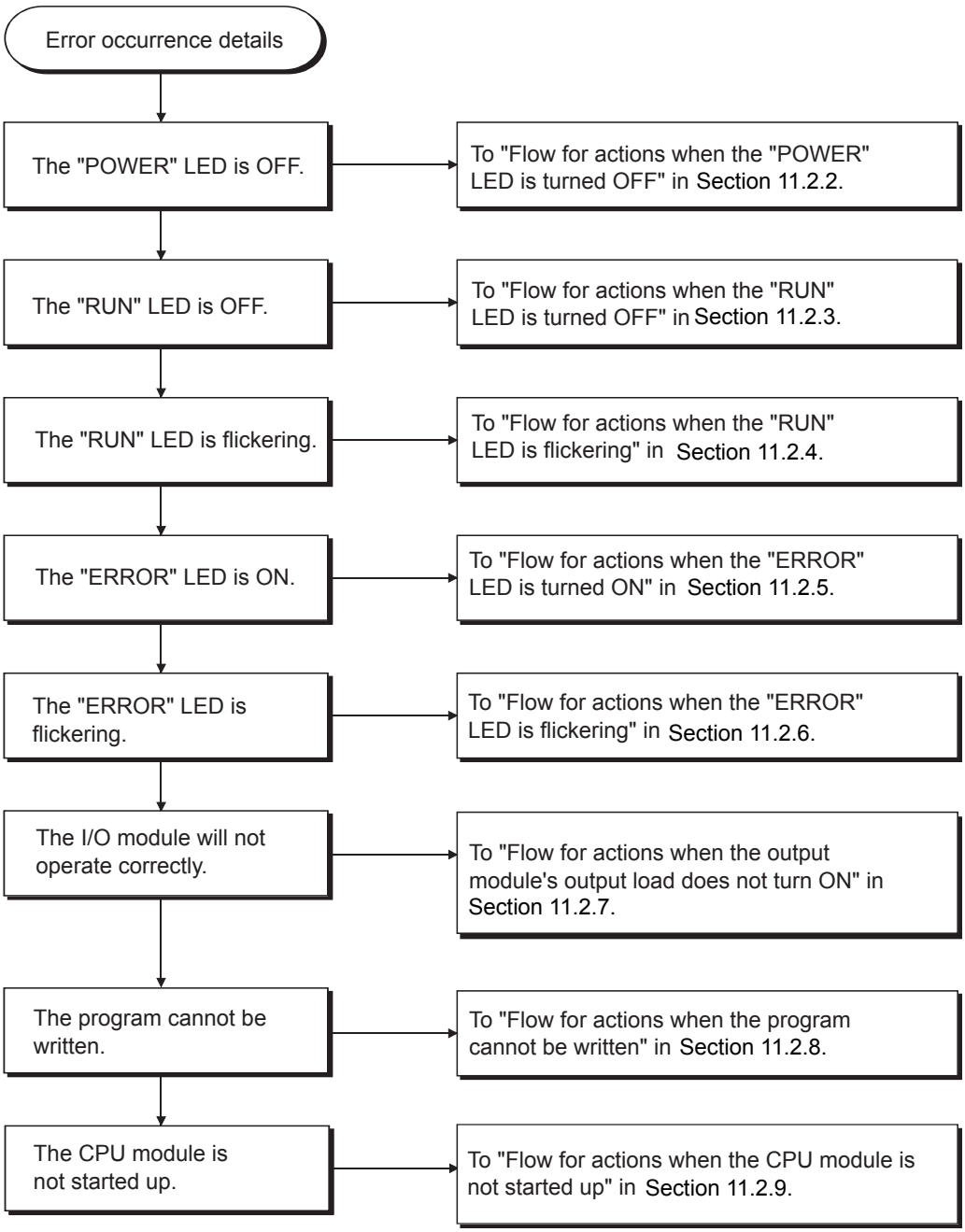

11.2.2 Flow for actions when the "POWER" LED is turned OFF

The corrective action when the "POWER" LED turns OFF when the power supply is turned ON or during operation is described.

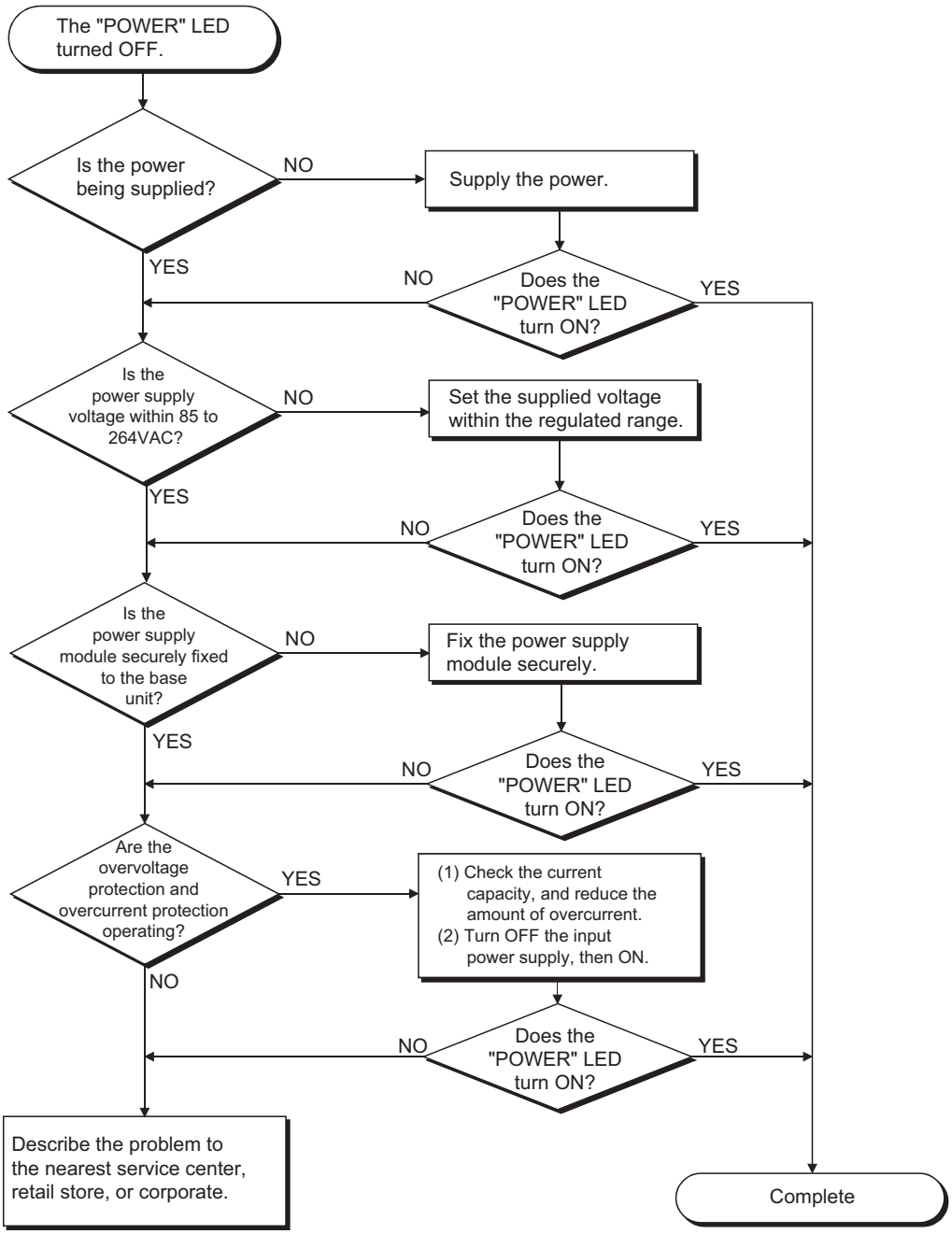

11.2.3 Flow for actions when the "RUN" LED is turned OFF

The corrective action when the "RUN" LED turns OFF during operation is described.

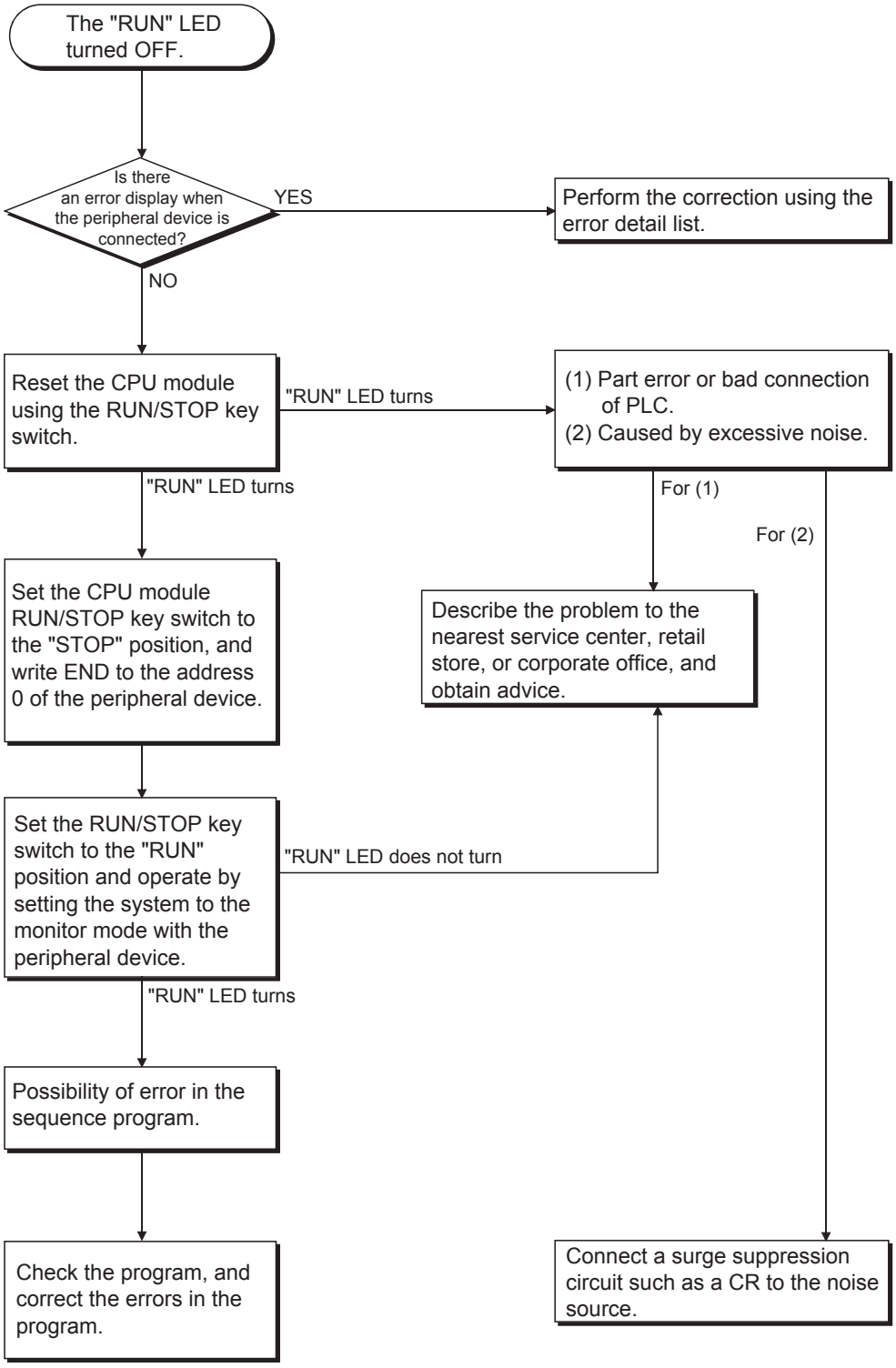

11.2.4 Flow for actions when the "RUN" LED is flickering

The corrective action when the "RUN" LED is flickering when turning on the power supply, starting operation, or during operation is described.

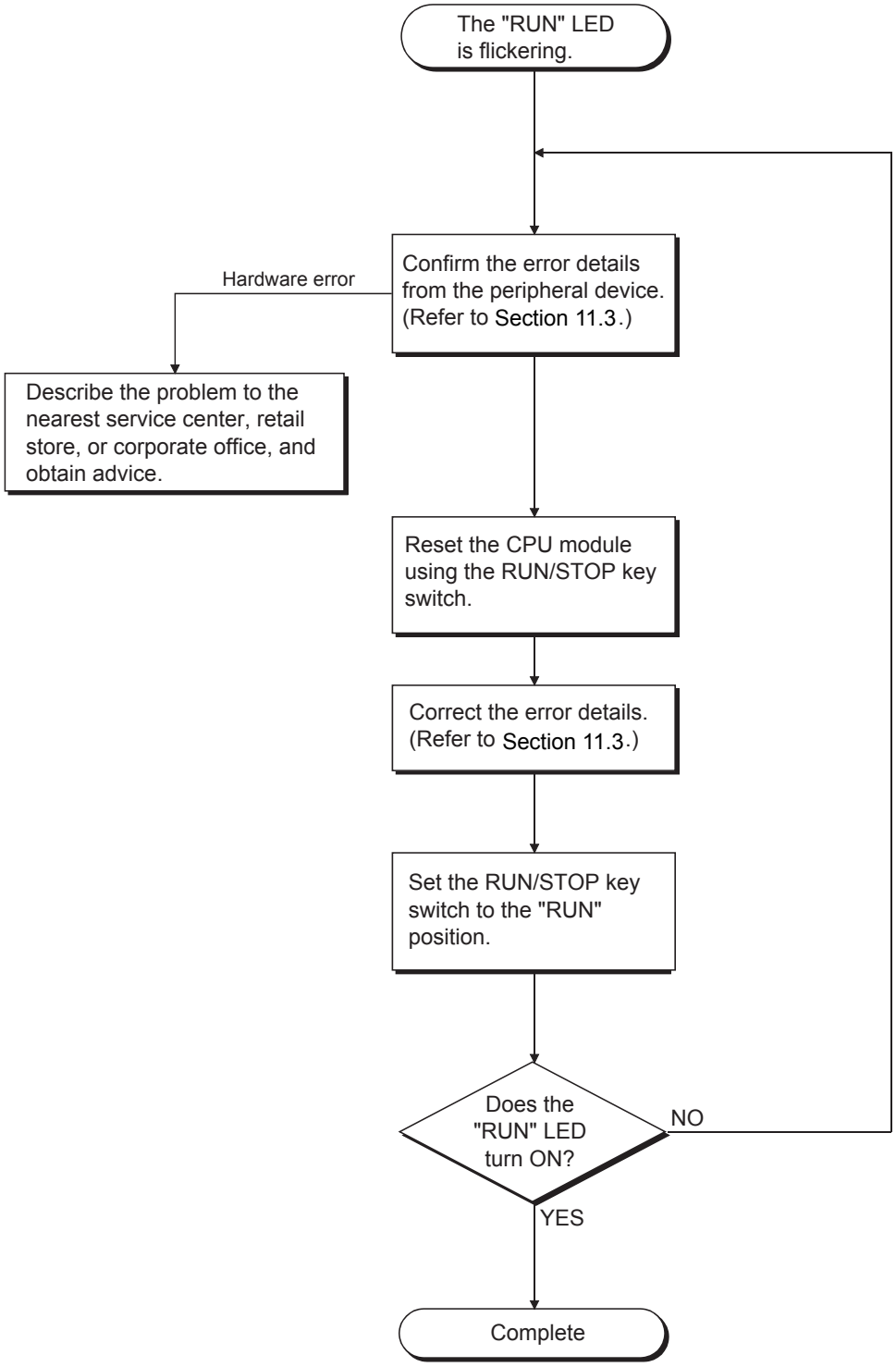

11.2.5 Flow for actions when the "ERROR" LED is turned ON

The flow when the "ERROR" LED turns ON during operation is described.

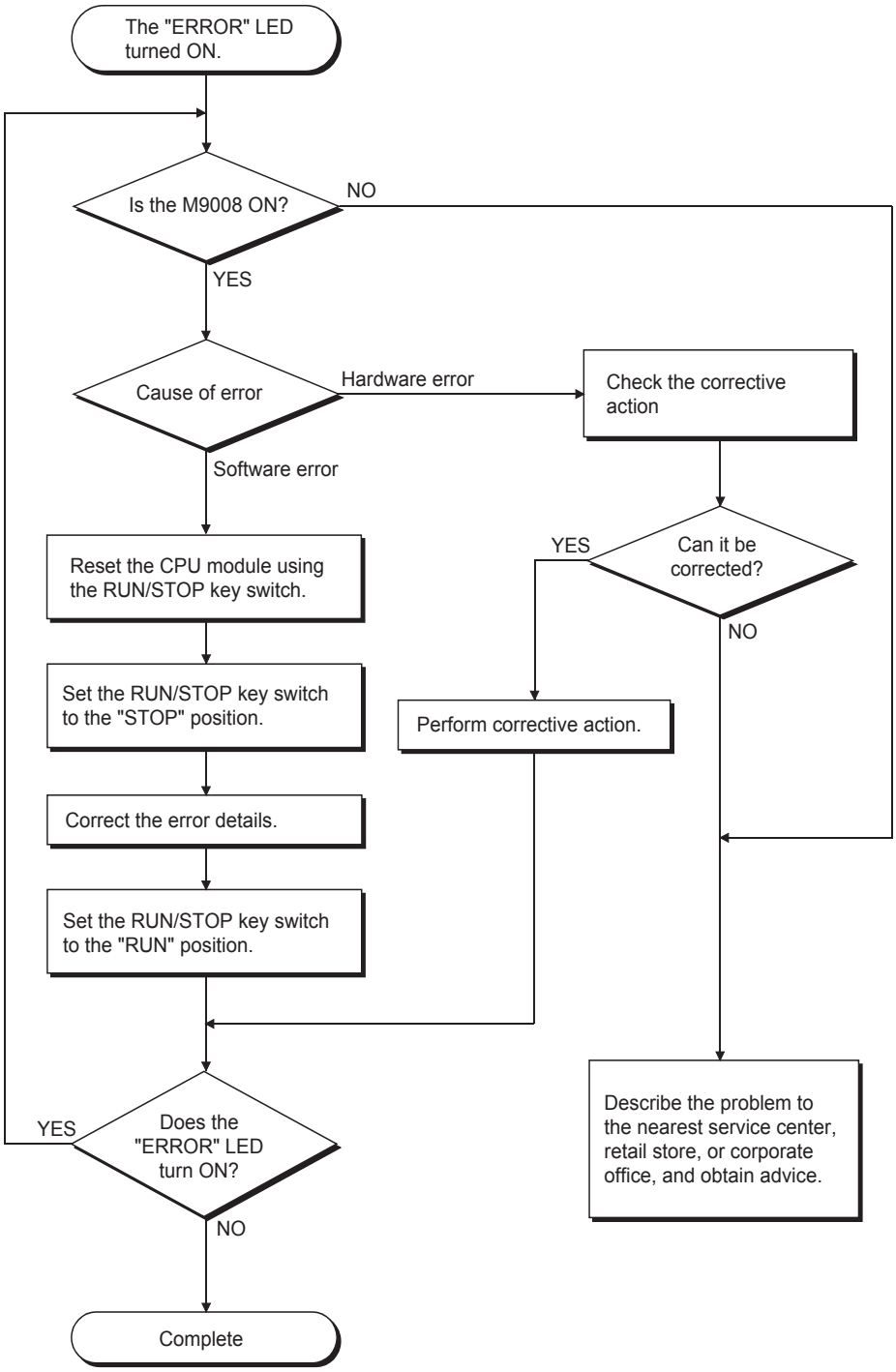

11.2.6 Flow for actions when the "ERROR" LED is flickering

The flow when the "ERROR" LED turns ON during operation is described.

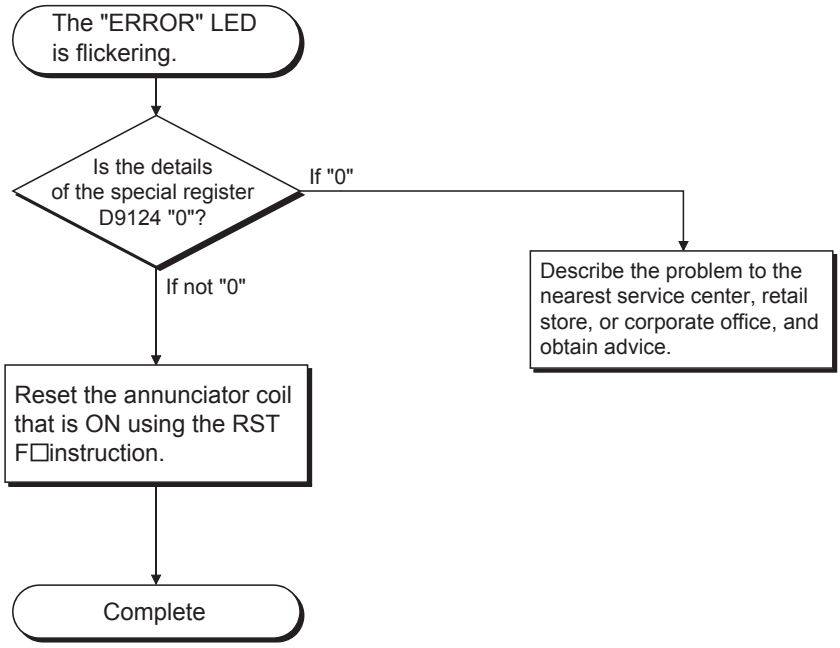

11.2.7 Flow for actions when the output module's output load does not turn ON

The corrective action when the output load of the output module does not turn ON during operation is described.

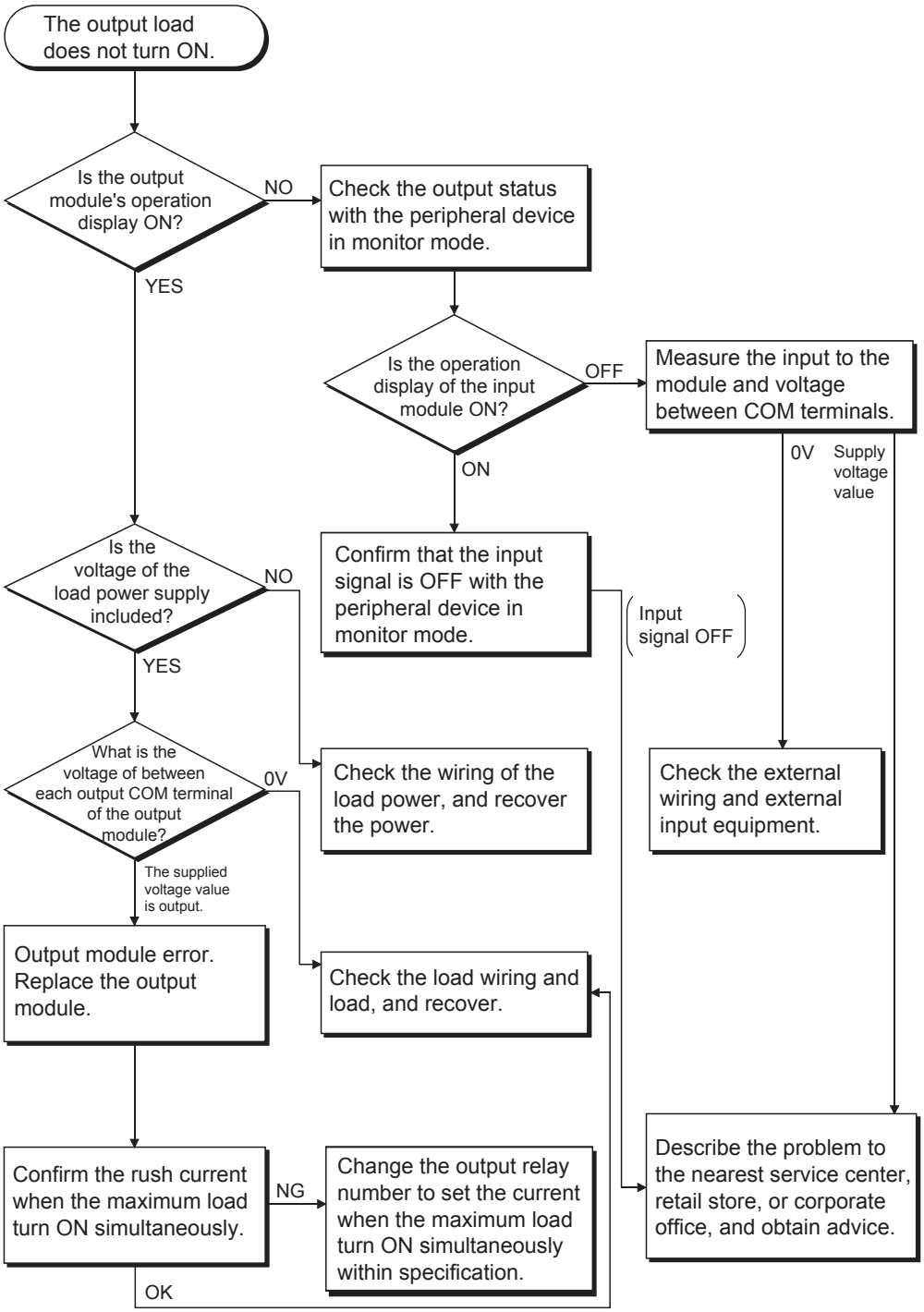

POINT
For problems when the input signal does not turn off and load does not turn off, perform troubleshooting by referring to the fault examples for the I/O module in Section 11.4.

11.2.8 Flow for actions when the program cannot be written

The flow when the program and other data cannot be written to the CPU is described.

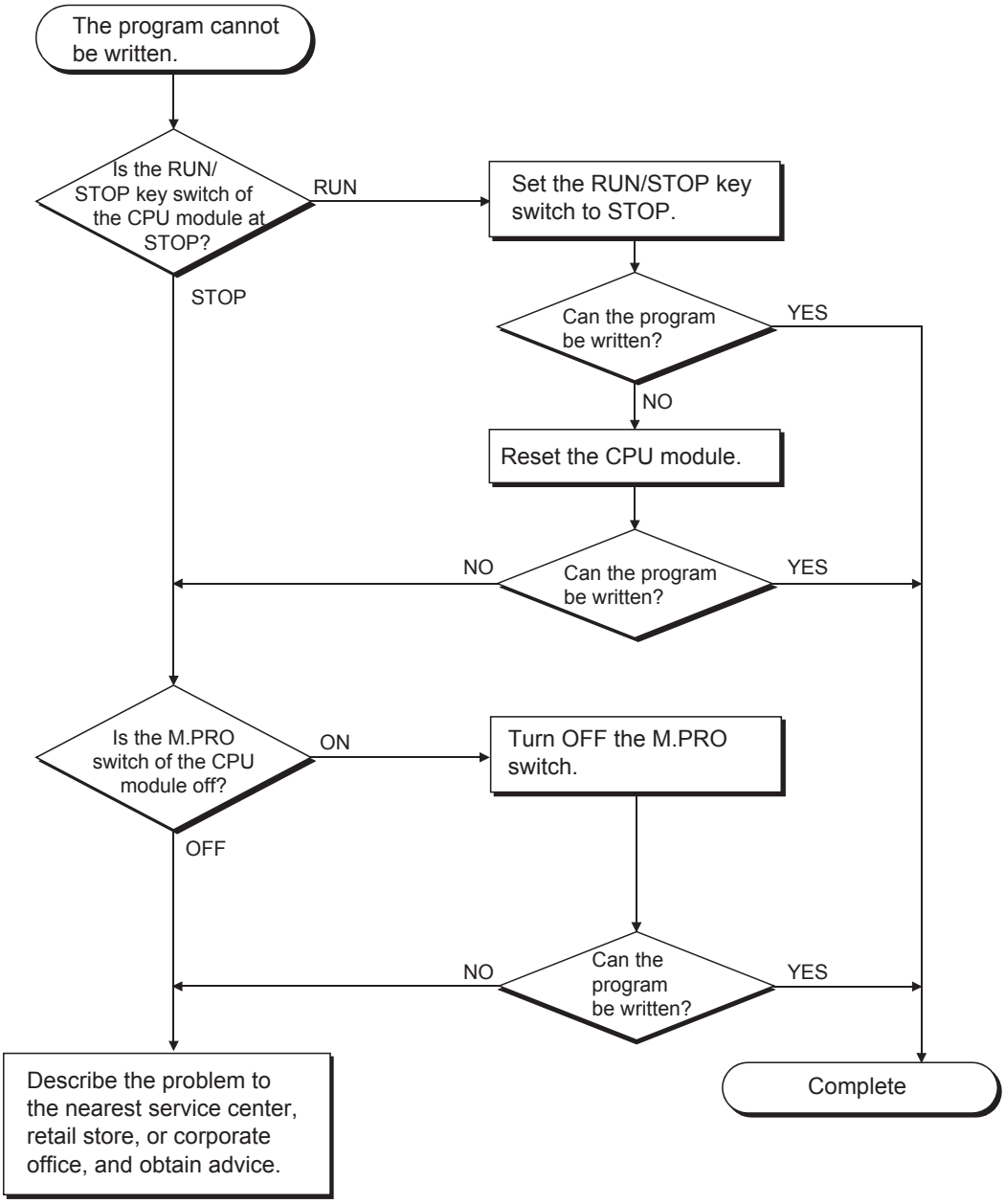

11.2.9 Flow for actions when the CPU module is not started up

The flow when the CPU module is not started up is described.

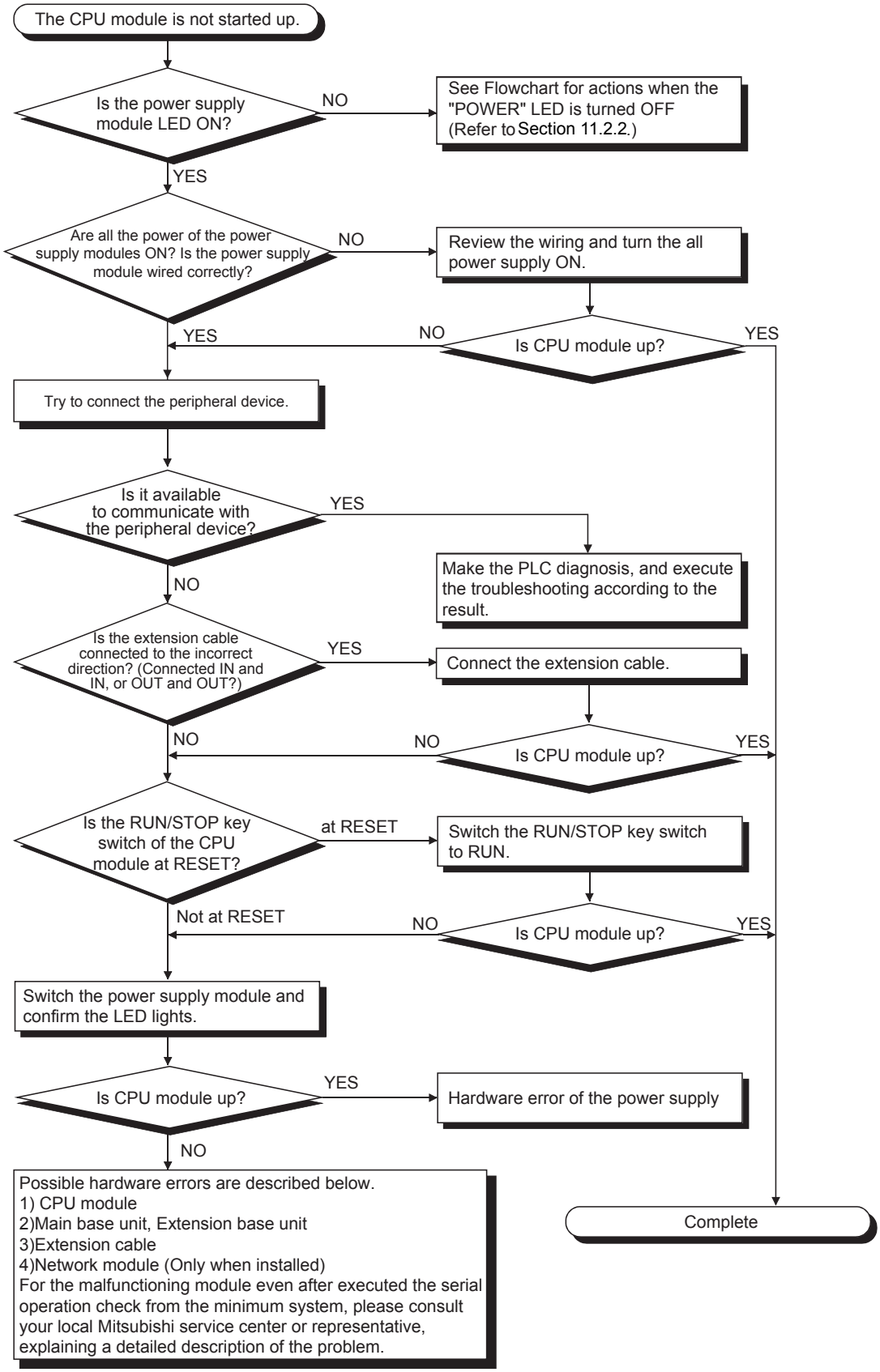

11.3 Error Code List

When an error occurs while the PLC is running or during RUN, error is displayed, or error code, detailed error code and error step are stored to special registers, D9008, D9091 and D9010, respectively, by the self-diagnostics function. Error definitions and corrective actions are shown below.

11.3.1 Procedure to read an error code

When an error occurs, the error code can be read with a peripheral device.
Refer to the Operating Manuals of the peripheral device for operation method.

11.3.2 Error code list for the AnUCPU, A2US(H)CPU, A2ASCPU and A2USH board

The following table shows the error messages, error codes, error definition and cause of error and corrective actions of detailed error codes. (*: The detailed error codes added to AnUCPU, A2USCPU, A2ASCPU and A2USH board)

Table 11.1 Error Code List for the AnUCPU, A2US(H)CPU, A2ASCPU and A2USH board

Error Massage	Error Code (D9008)	Detailed Error Code (D9091)	CPU States	Error and Cause	Corrective Action
"INSTRCT CODE ERR" (Checked when STOP → RUN or at execution of instruction.)	10	101	STOP	Instruction codes which the CPU cannot decode are included in the program.	(1) Read the error step using a peripheral device and correct the program of the step. (2) Check the ROM if it contains instruction codes which cannot be decoded. If it does, replace it with a correct ROM.
		102		Index qualification is specified for a 32-bit constant.	Read the error step using a peripheral device and correct the program of the step.
		103		Device specified by a dedicated instruction is not correct.	
		104		An dedicated instruction has incorrect program structure.	
		105		An dedicated instruction has incorrect command name.	
		106		Index qualification using Z or V is included in the program between LEDA IX and LEDA IXEND.	
		107		(1) Index qualification is specified for the device numbers and set values in the OUT instruction of timers and counters. (2) Index qualification is specified at the label number of the pointer (P) provided to the head of destination of the CJ, SCJ, CALL, CALLP, JMP, LEDA/B, FCALL and LEDA/B, BREAK instructions or at the label number of the interrupt pointer (I) provided to the head of an interrupt program.	
		108		Errors other than 101 to 107 mentioned above.	

Table 11.1 Error Code List for the AnUCPU, A2US(H)CPU, A2ASCPU and A2USH board (Continue)

Error Massage	Error Code (D9008)	Detailed Error Code (D9091)	CPU States	Error and Cause	Corrective Action
"PARAMETER ERROR" (Checked at power on and at STOP/PAUSE → RUN.)	11	111	STOP	Capacity settings of the main and sub programs, microcomputer program, file register comments, status latch, sampling trace and extension file registers are not within the usable range of the CPU.	Read parameters in the CPU memory, check the contents, make necessary corrections and write them again to the memory.
		112		Total of the set capacity of the main and sub programs, file register comments, status latch, sampling trace and extension file registers exceeds capacity of the memory cassette.	
		113		Latch range set by parameters or setting of M, L or S is incorrect.	Read parameters in the CPU memory, check the contents, make necessary corrections and write them again to the memory
		114		Sum check error	
		115		Either of settings of the remote RUN/PAUSE contact point by parameters, operation mode at occurrence of error, annunciator indication mode, or STOP → RUN indication mode is incorrect.	
		116		The MNET-MINI automatic refresh setting by parameters is incorrect.	
		117		Timer setting by parameters is incorrect.	
		118		Counter setting by parameters is incorrect.	
"MISSING END INS" (Checked at STOP → RUN.)	12	121	STOP	The END END (FEND) instruction is not given in the main program.	Write the END instruction at the end of the main program.
		122		The END (FEND) instruction is not given in the sub program if the sub program is set by parameters.	Write the END instruction at the end of the sub program.
		123		(1) When subprogram 2 is set by a parameter, there is no END (FEND) instruction in subprogram 2. (2) When subprogram 2 is set by a parameter, subprogram 2 has not been written from a peripheral device.	
		124		(1) When subprogram 3 is set by a parameter, there is no END (FEND) instruction in subprogram 3. (2) When subprogram 3 is set by a parameter, subprogram 2 has not been written from a peripheral device.	

Table 11.1 Error Code List for the AnUCPU, A2US(H)CPU, A2ASCPU and A2USH board (Continue)

Error Massage	Error Code (D9008)	Detailed Error Code (D9091)	CPU States	Error and Cause	Corrective Action
"CAN'T EXECUTE (P)" (Checked at execution of instruction.)	13	131	STOP	The same device number is used at two or more steps for the pointers (P) and interrupt pointers (I) used as labels to be specified at the head of jump destination.	Eliminate the same pointer numbers provided at the head of jump destination.
		132		Label of the pointer (P) specified in the the CJ, SCJ, CALL, CALLP, JMP, LEDA/BFCALL or LEDA/BBREAK instruction is not provided before the END instruction.	Read the error step using a peripheral device, check contents and insert a jump destination pointer (P).
		133		(1) The RET instruction was included in the program and executed though the CALL instruction was not given. (2) The NEXT LEDA/BBREAK instructions were included in the program and executed though the FOR instruction was not given. (3) Nesting level of the CALL, CALLP and FOR instructions is 6 levels or deeper, and the 6th level was executed. (4) There is no RET or NEXT instruction at execution of the CALL or FOR instruction.	(1) Read the error step using a peripheral device, check contents and correct program of the step. (2) Reduce the number of nesting levels of the CALL, CALLP and FOR instructions to 5 or less.
		134		The CHG instruction was included in the program and executed though no sub program was provided.	Read the error step using a peripheral device and delete the CHG instruction circuit block.
		135		(1) LEDA IX and LEDA IXEND instructions are not paired. (2) There are 33 or more sets of LEDA IX and LEDA IXEND instructions.	(1) Read the error step using a peripheral device, check contents and correct program of the step. (2) Reduce the number of sets of LEDA IX and LEDA IXEND instructions to 32 or less.

Table 11.1 Error Code List for the AnUCPU, A2US(H)CPU, A2ASCPU and A2USH board (Continue)

Error Massage	Error Code (D9008)	Detailed Error Code (D9091)	CPU States	Error and Cause	Corrective Action
"CHK FORMAT ERR" (Checked at STOP/PAUSE→RUN.)	14	141	STOP	Instructions (including NOP) other than LDX, LDIX, ANDX and ANIX are included in the CHK instruction circuit block.	Check the program of the CHK instruction and correct it referring to contents of detailed error codes.
		142		Multiple CHK instructions are given.	
		143		The number of contact points in the CHK instruction circuit block exceeds 150.	
		144		The LEDA CHK instructions are not paired with the LEDA CHKEND instructions, or 2 or more pairs of them are given.	
		145		Format of the block shown below, which is provided before the CHK instruction circuit block, is not as specified. P254 ─┤├──CJ P ⬚ ├	
		146		Device number of D1 in the CHK D1 D2 instruction is different from that of the contact point before the CJ P⬚ instruction.	
		147		Index qualification is used in the check pattern circuit.	
		148		(1) Multiple check pattern circuits of the LEDA CHK - LEDA CHKEND instructions are given. (2) There are 7 or more check condition circuits in the LEDA CHK - LEDA CHKEND instructions. (3) The check condition circuits in the LEDA CHK - LEDA CHKEND instructions are written without using X and Y contact instructions or compare instructions. (4) The check pattern circuits of the LEDA CHK - LEDA CHKEND instructions are written with 257 or more steps.	
"CAN'T EXECUTE (I)" (Checked at occurrence of interrupt.)	15	151	STOP	The IRET instruction was given outside of the interrupt program and was executed.	Read the error step using a peripheral device and delete the IRET instruction.
		152		There is no IRET instruction in the interrupt program.	Check the interrupt program if the IRET instruction is given in it. Write the IRET instruction if it is not given.
		153		Though an interrupt module is used, no interrupt pointer (I) which corresponds to the module is given in the program. Upon occurrence of error, the problem pointer (I) number is stored at D9011.	Monitor special register D9011 using a peripheral device, and check if the interrupt program that corresponds to the stored data is provided or if two or more interrupt pointers (I) of the same number are given. Make necessary corrections.

Table 11.1 Error Code List for the AnUCPU, A2US(H)CPU, A2ASCPU and A2USH board (Continue)

Error Massage	Error Code (D9008)	Detailed Error Code (D9091)	CPU States	Error and Cause	Corrective Action
"CASSETTE ERROR"	16	—	STOP	Memory cassette is not loaded.	Turn off the PC power and load the memory cassette.
"RAM ERROR" (Checked at power on.)	20	201	STOP	The sequence program storage RAM in the CPU module caused an error.	Since this is CPU hardware error, consult Mitsubishi representative.
		202		The work area RAM in the CPU module caused an error.	
		203		The device memory in the CPU module caused an error.	
		204		The address RAM in the CPU module caused an error.	
"OPE CIRCUIT ERROR" (Checked at power on.)	21	211	STOP	The operation circuit for index qualification in the CPU does not work correctly.	Since this is CPU hardware error, consult Mitsubishi representative.
		212		Hardware (logic) in the CPU does not operate correctly.	
		213		The operation circuit for sequential processing in the CPU does not operate correctly.	
"OPE. CIRCUIT ERR." (Checked at execution of the END instruction)		214		In the END processing check, the operation circuit for index qualification in the CPU does not work correctly.	
		215		In the END processing check, the hardware in the CPU does not operate correctly.	
"WDT ERROR" (Checked at execution of END processing.)	22	—	STOP	Scan time is longer than the WDT time. (1) Scan time of the user's program has been extended due to certain conditions. (2) Scan time has been extended due to momentary power failure occurred during scanning.	(1) Calculate and check the scan time of user program and reduce the scan time using the CJ instruction or the like. (2) Monitor contents of special register D9005 using a peripheral device. If the contents are other than 0, power supply voltage may not be stable. Check power supply and reduce variation in voltage.
"END NOT EXECUTE" (Checked at execution of the END instruction.)	24	241	STOP	Whole program of specified program capacity was executed without executing the END instructions. (1) When the END instruction was to be executed, the instruction was read as other instruction code due to noise. (2) The END instruction changed to other instruction code due to unknown cause.	(1) Reset and run the CPU again. If the same error recurs, Since this is CPU hardware error, consult Mitsubishi representative.
"MAIN CPU DOWN"	26	—	STOP	The main CPU is malfunctioning or faulty.	Since this is CPU hardware error, consult Mitsubishi representative
"UNIT VERIFY ERR" (Checked continuously.)	31	—	Stop or Continue (set by parameter)	Current I/O module information is different from that recognized when the power was turned on. (1) The I/O module (including special function modules) connection became loose or the module was disconnected during operation, or wrong module was connected.	Read detailed error code using a peripheral device and check or replace the module which corresponds to the data (I/O head number). Or, monitor special registers D9116 to D9123 using a peripheral device and check or replace the modules if corresponding data bit is "1".

Table 11.1 Error Code List for the AnUCPU, A2US(H)CPU, A2ASCPU and A2USH board (Continue)

Error Massage	Error Code (D9008)	Detailed Error Code (D9091)	CPU States	Error and Cause	Corrective Action
"FUSE BREAK OFF" (Checked continuously.)	32	—	Stop or Continue (set by parameter)	(1) There is an output module of which fuse is blown. (2) The external power supply for output load is turned OFF or is not connected.	(1) Check the FUSE BLOWN indicator LED on the output module and replace the fuse. (2) Read detailed error code using a peripheral device and replace the fuse of the output module which corresponds to the data (I/O head number). Or, monitor special registers D9100 to D9107 using a peripheral device and replace the fuse of the output module of which corresponding data bit is "1". (3) Check the ON/OFF status of the external power supply for output load.
"CONTROL-BUS ERR"	40	401	STOP	Due to the error of the control bus which connects to special function modules, the FROM / TO instruction cannot be executed.	Since it is a hardware error of special function module, CPU module or base module, replace and check defective module(s). Consult Mitsubishi representative for defective modules.
		402		If parameter I/O assignment is being executed, special function modules are not accessible at initial communication. At error occurrence, the head I/O number (upper 2 digits of 3 digits) of the special function module that caused error is stored at D9011.	
"SP.UNIT DOWN"	41	411	STOP	Though an access was made to a special function module at execution of the FROM / TO instruction no response is received.	Since it is hardware error of the special function module to which an access was made, consult Mitsubishi representative.
		412		If parameter I/O assignment is being executed, no response is received from a special function module at initial communication. At error occurrence, the head I/O number (upper 2 digits of 3 digits) of the special function module that caused error is stored at D9011.	
"LINK UNIT ERROR"	42	—	STOP	(1) Either data link module is loaded to the master station. (2) There are 2 link modules which are set to the master station (station 0).	(1) Remove data link module from the master station. (2) Reduce the number of master stations to 1. Reduce the link modules to 1 when the 3-tier system is not used.
"I/O INT. ERROR"	43	—	STOP	Though the interrupt module is not loaded, an interrupt occurred.	Since it is hardware error of a module, replace and check a defective module. For defective modules, consult Mitsubishi representative.

Table 11.1 Error Code List for the AnUCPU, A2US(H)CPU, A2ASCPU and A2USH board (Continue)

Error Massage	Error Code (D9008)	Detailed Error Code (D9091)	CPU States	Error and Cause	Corrective Action
"SP.UNIT LAY.ERR."	44	441	STOP	A special function module is assigned as an I/O module, or vice versa, in the I/O assignment using parameters from the peripheral device.	Execute I/O assignment again using parameters from the peripheral device according to the loading status of special function modules.
		442		There are 9 or more special function modules (except the interrupt module) which can execute interruption to the CPU module loaded.	Reduce the special function modules (except the interrupt module) which can execute interrupt start to 8 or less.
		443		There are 2 or more data link modules loaded.	Reduce the data link modules to 1 or less.
		444		There are 7 or more modules such as a computer link module loaded to one CPU module.	Reduce the computer link modules to 6 or less.
		445		There are 2 or more interrupt modules loaded.	Reduce the interrupt modules to 1 or less.
		446		Modules assigned by parameters for MNT/MINI automatic refresh from the peripheral device do not conform with the types of station modules actually linked.	Perform again module assignment for MNT/MINI automatic refresh with parameters according to actually linked station modules.
		447		The number of modules of I/O assignment registration (number of loaded modules) per one CPU module for the special function modules which can use dedicated instructions is larger than the specified limit. (Total of the number of computers shown below is larger than 1344.) (AD59 × 5) (AD57(S1)/AD58 × 8) (AJ71C24(S3/S6/S8) × 10) (AJ7IUC24 × 10) (AJ71C21(S1) (S2) × 29) + ((AJ71PT32(S3) in extension mode × 125) Total > 1344	Reduce the number of loaded special function modules.
		448*		(1) Five or more network modules have been installed. (2) A total of five or more of network modules and data link modules have been installed.	Make the total of the installed network modules and data link modules four or less.

Table 11.1 Error Code List for the AnUCPU, A2US(H)CPU, A2ASCPU and A2USH board (Continue)

Error Massage	Error Code (D9008)	Detailed Error Code (D9091)	CPU States	Error and Cause	
"SP.UNIT ERROR" (Checked at execution of the FROM/TO instruction or the dedicated instructions for special function modules.)	46	461	Stop or Continue (set by parameter)	Module specified by the FROM / TO instruction is not a special function module.	Read the error step using a peripheral device and check and correct contents of the FROM / TO instruction of the step.
		462		(1) Module specified by the dedicated instruction for special function module is not a special function module or not a corresponding special function module. (2) A command was issued to a CC-Link module with function version under B. (3) A CC-Link dedicated command was issued to a CC-Link module for which the network parameters have not been set.	(1) Read the error step using a peripheral device and check and correct contents of the dedicated instruction for special function modules of the step. (2) Replace with a CC-Link module having function version B and above. (3) Set the parameters.
"LINK PARA. ERROR"	47	0	Continue	[When using MELSECNET/(II)] (1) When the link range at a data link CPU which is also a master station (station number = 00) is set by parameter setting at a peripheral device, for some reason the data written to the link parameter area differs from the link parameter data read by the CPU. Alternatively, no link parameters have been written. (2) The total number of slave stations is set at 0. (3) The head I/O number of the network parameters is incorrect.	(1) Write the parameters again and check. (2) Check the station number settings. (3) Check the head I/O number of the network parameters. (4) Persistent error occurrence may indicate a hardware fault. Consult your nearest Mitsubishi representative, explaining the nature of the problem.
		470*		[When using MELSECNET/10] (1) The contents of the network refresh parameters written from a peripheral device differ from the actual system at the base unit. (2) The network refresh parameters have not been written. (3) The head I/O number of the network parameters is incorrect.	Write the network refresh parameters again and check.
		471*		[When using MELSECNET/10] (1) The transfer source device range and transfer destination device range specified for the inter-network transfer parameters are in the same network. (2) The specified range of transfer source devices or transfer destination devices for the inter-network transfer parameters spans two or more networks. (3) The specified range of transfer source devices or transfer destination devices for the inter-network transfer parameters is not used by the network.	Write the network parameters again and check.
		472*		[When using MELSECNET/10] The contents of the routing parameters written from a peripheral device differ from the actual network system.	Write the routing parameters again and check.

Table 11.1 Error Code List for the AnUCPU, A2US(H)CPU, A2ASCPU and A2USH board (Continue)

Error Massage	Error Code (D9008)	Detailed Error Code (D9091)	CPU States	Error and Cause	
"LINK PARA. ERROR"	47	473*	Continue	[When using MELSECNET/10] (1) The contents of the network parameters for the first link unit, written from a peripheral device, differ from the actual network system. (2) The link parameters for the first link unit have not been written. (3) The setting for the total number of stations is 0.	(1) Write the parameters again and check. (2) Check the station number settings. (3) Persistent error occurrence may indicate a hardware fault. Consult your nearest Mitsubishi representative, explaining the nature of the problem.
		474*		[When using MELSECNET/10] (1) The contents of the network parameters for the second link unit, written from a peripheral device, differ from the actual network system. (2) The link parameters for the second link unit have not been written. (3) The setting for the total number of stations is 0.	
		475*		[When using MELSECNET/10] (1) The contents of the network parameters for the third link unit, written from a peripheral device, differ from the actual network system. (2) The link parameters for the third link unit have not been written. (3) The setting for the total number of stations is 0.	
		476*		[When using MELSECNET/10] (1) The contents of the network parameters for the fourth link unit, written from a peripheral device, differ from the actual network system. (2) The link parameters for the fourth link unit have not been written. (3) The setting for the total number of stations is 0.	
		477		A ink parameter error was detected by the CC-Link module.	(1) Write the parameters in again and check. (2) If the error appears again, there is a problem with the hardware. Consult your nearest System Service, sales office or branch office.

Table 11.1 Error Code List for the AnUCPU, A2US(H)CPU, A2ASCPU and A2USH board (Continue)

Error Massage	Error Code (D9008)	Detailed Error Code (D9091)	CPU States	Error and Cause	
"OPERATION ERROR" (Checked at execution of instruction.)	50	501	Stop or Continue (set by parameter)	(1) When file registers (R) are used, operation is executed outside of specified ranges of device numbers and block numbers of file registers (R). (2) File registers are used in the program without setting capacity of file registers.	Read the error step using a peripheral device and check and correct program of the step.
		502		Combination of the devices specified by instruction is incorrect.	
		503		Stored data or constant of specified device is not in the usable range.	
		504		Set number of data to be handled is out of the usable range.	
		505		(1) Station number specified by the LEDA/BLRDP LEDA/BLWTP, LRDP, LWTP instructions is not a local station. (2) Head I/O number specified by the LEDA/BRFRP LEDA/BRTOP, RFRP, RTOP instructions is not of a remote station.	
		506		Head I/O number specified by the LEDA/BRFRP LEDA/BRTOP, RFRP, RTOP instructions is not of a special function module.	
		507		(1) When the AD57(S1) or AD58 was executing instructions in divided processing mode, other instructions were executed to either of them. (2) When an AD57(S1) or AD58 was executing instructions in divided processing mode, other instructions were executed in divided mode to another AD57(S1) or AD58.	Read the error step using a peripheral device and provide interlock with special relay M9066 or modify program structure so that, when the AD57(S1) or AD58 is executing instructions in divided processing mode, other instructions may not be executed to either of them or to another AD57(S1) or AD58 in divided mode.
		508		A CC-Link dedicated command was issued to three or more CC-Link modules.	The CC-Link dedicated command can be issued only to two or less CC-Link modules.

Table 11.1 Error Code List for the AnUCPU, A2US(H)CPU, A2ASCPU and A2USH board (Continue)

Error Massage	Error Code (D9008)	Detailed Error Code (D9091)	CPU States	Error and Cause	
"OPERATION ERROR" (Checked at execution of instruction.)	50	509	STOP	(1) An instruction which cannot be executed by remote terminal modules connected to the MNET/ MINI-S3 was executed to the modules. (2) Though there are 32 entries of FROM or TO instructions registered with a PRC instruction in the mailbox memory area waiting for execution), another PRC instruction is executed to cause an overflow in the mail box (memory area waiting for execution). (3) The PIDCONT instruction was executed without executing the PIDINIT instruction. The PID57 instruction was executed without executing the PIDINIT or PIDCONT instruction. The program presently executed was specified by the ZCHG instruction. (4) The number of CC-Link dedicated command executed in one scan exceeded 10.	(1) Read the error step using a peripheral device and correct the program, meeting loaded conditions of remote terminal modules. (2) Use special register D9081 (number of empty entries in mailbox) or special relay M9081 (BUSY signal of mail box) to suppress registration or execution of the PRC instruction. (3) Correct the program specified by the ZCHG instruction to other. (4) Set the number of CC-Link dedicated commands executed in one scan to 10 or less.
"MAIN CPU DOWN"	60	—	STOP	(1) The CPU malfunctioned due to noise. (2) Hardware failure.	(1) Take proper countermeasures for noise. (2) Since this is hardware error, consult Mitsubishi representative.
		602		(1) Failure in the power module, CPU module, main base unit or expansion cable is detected.	(1) Replace the power module, CPU module, main base unit or expansion cable.
"BATTERY ERROR" (Checked at power on.)	70	—	Continue	(1) Battery voltage has lowered below specified level. (2) Battery lead connector is not connected.	(1) Replace battery. (2) If a RAM memory or power failure compensation function is used, connect the lead connector.

11.4 Fault Examples with I/O Modules

Examples of faults concerning I/O circuits and the corrective actions are explained.

11.4.1 Faults with the input circuit and the corrective actions

Examples of faults concerning input circuits and the corrective actions are explained.

Table 11.2 Faults with the input circuit and the corrective actions

	Situation	Cause	Countermeasure
Example 1	Input signal does not turn OFF.	• Leak current from input switch (driven by a contactless switch, etc.) 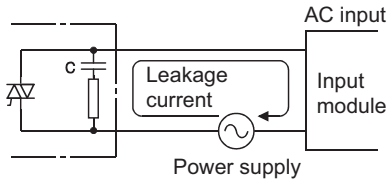	• Connect an appropriate resistor so that voltage between the terminals of the input module is lower than the OFF voltage. 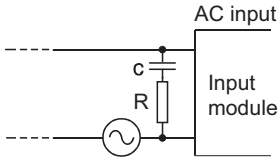 For CR constant, 0.1 to 0.47 μF+47 to 120Ω (1/2W) is recommended.
Example 2	Input signal does not turn OFF.	• Driven by a limit switch with a neon lamp 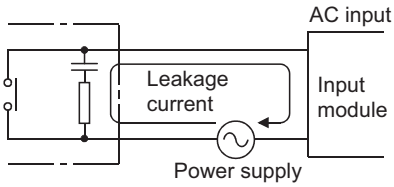	• Same as the example 1. • Or, provide a totally independent display circuit separately.
Example 3	Input signal does not turn OFF.	• Line capacity C of the leak current twisted pair cable due to line capacity of the wiring cable is about 100PF/m. 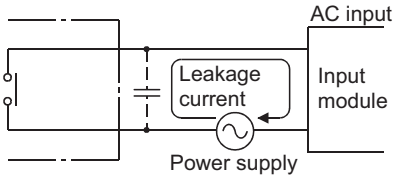	• Same as the example 1. • However, it does not occur when power supply is on the side of input device as shown below. 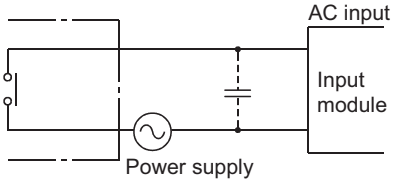
Example 4	Input signal does not turn OFF.	• Driven by a switch with LED indication 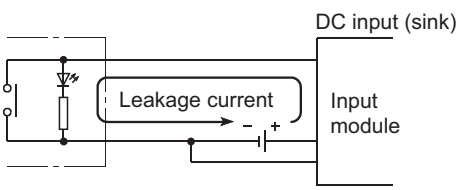	• Connect an appropriate resistance so that voltage between the terminal of the input module and the common is lower than the OFF voltage as shown below. 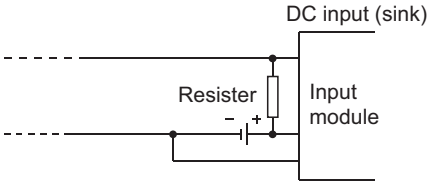 * An example of calculation of resistance to be connected is provided on the following page.

Table 11.2 Faults with the input circuit and the corrective actions (Continued)

	Situation	Cause	Countermeasure
Example 5	Input signal does not turn OFF.	• Sneak path due to the use of two power supplies. 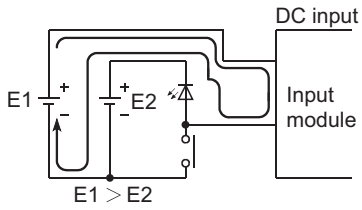 	• Use only one power supply. • Connect a diode to prevent the sneak path (figure below). 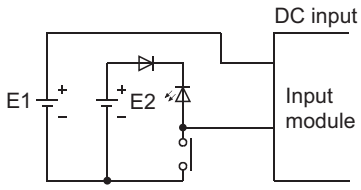

Calculation example for Example 4

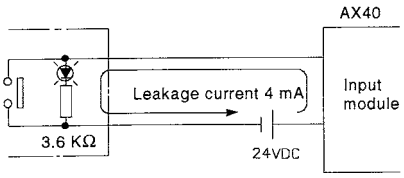

If a switch with LED indication is connected to theAX40 and leak current of 4mA is generated

- Voltage V_{TB} between the terminal and common is as follows:
  V_{TB} = 4[mA] × 2.4[kΩ] = 9.6[V] (Ignore the voltage drop caused by the LED.)
  Because the condition for the OFF voltage (6[V]) is not satisfied, the input does not turn off. To correct this, connect a resistor as shown below.

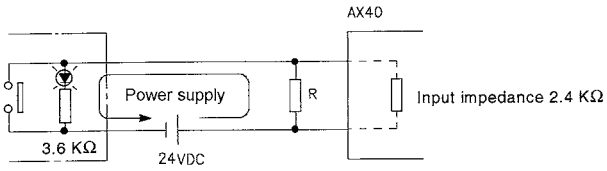

- Calculation of resistance of connected resistor R
  The voltage of AX40 between the terminals must be reduced to within 6[V]. The current for reducing the voltage between the terminals to within 6[V] is:
  (24 - 6[V])/3.6[kΩ]=5mA
  Therefore, resistor R for flowing current I of 5[mA] has to be connected.
- Resistance of the connected resistor R is obtained in the following equations.
  6[V]/R > 5 - 2.5[mA] ← 6[V]/Input impedance 2.4[kΩ]
  6[V]/2.5mA > R
  2.4[kΩ] > R
  Suppose that the resistance R is 2[kΩ].
  The power capacity W of the resistor when the switch turned on is:
  W = (Applied voltage)^2/R
  W = (26.4[V])^2/2[kΩ] = 0.348[W]
- Because the resistance is selected so that the power capacity is three to five times the actual power consumption, 1.5 to 2 [W] should be selected. From the above, the resistor to be connected across the terminal in question and COM is 2[kΩ] 1.5 to 2[W].

11.4.2 Faults in the output circuit

Faults concerning output circuits and the corrective actions are explained.

Table 11.3 Faults with the output circuit and the corrective actions

	Situation	Cause	Countermeasure
Example 1	An excessive voltage is applied to the load when output is off.	• When the load is subjected to half wave rectification inside (Solenoids have these types.) 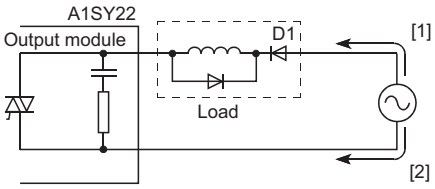 • When the polarity of the power supply is [1], C is charged, and when the polarity is [2], the voltage charged in C + voltage of the power supply are applied to the both ends of D1. The maximum value of the voltage is about 2.2E.	• Connect a resistor with several tens to several hundreds of kΩ to the both ends of the load. (With this kind of usage, there is no problem with the output element, but the diode built-in to the load may deteriorate and burn-out.) 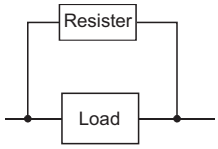
Example 2	Load does not turn OFF. (Triac output)	• Leak current caused by built-in noise supressor 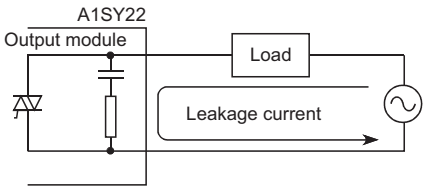 	• Connect a resistor to the both ends of the load. (When the wiring distance from the output card to the load is long, be aware of the risk of a leak current due to line capacity.) 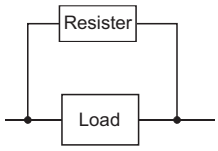

Table 11.3 Faults with the output circuit and the corrective actions (Continued)

	Situation	Cause	Countermeasure
Example 3	The load is not turned OFF. (Triac output)	• The load current is lower than the minimum load current. 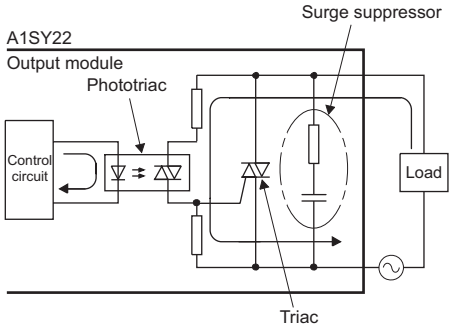 • When the load current is lower than the minimum load current of the output module, the triac does not operate since the load current flows into a phototriac as shown below. When an inductive load is connected, the load may not be turned OFF since surge at the time of OFF is applied to the phototriac.	• Connect a resistor to both ends of a load so that the load current is higher than the minimum load current. 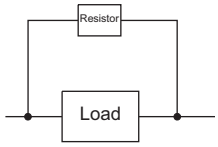
Example 4	When load is CR type timer, the time limit fluctuates. (Triac output)	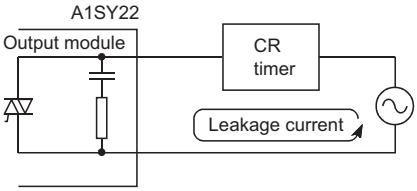 	• Start the relay first, then start the CR-type timer at the contact. (In some timers, internal circuit may be half wave rectification type, so the caution as to the example 1 is necessary here.) 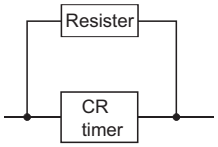 Calculate the constant of the resistance based on the load.

Table 11.3 Faults with the output circuit and the corrective actions (Continued)

	Situation	Cause	Countermeasure
Example 5	When the external power supply turns on, the load turns on for a moment.	Erroneous output due to the stray capacitance (C) between collector and emitter of hotocoupler. (There is no erroneous output at normal road. An erroneous output may occur at high sensitivity load (such as solid state relay).) 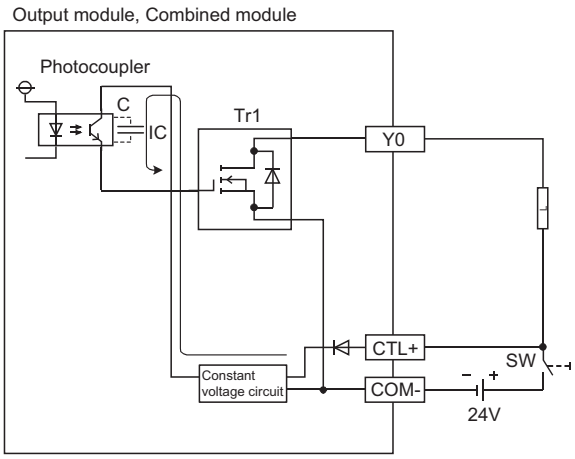 If the external power supply is turned on precipitously, Ic current flows due to the stray capacitance (C) between collector and emitter of hotocoupler. Ic current flows to the next stage of transister Tr1 gate and Y0 output turns on by 100 μs 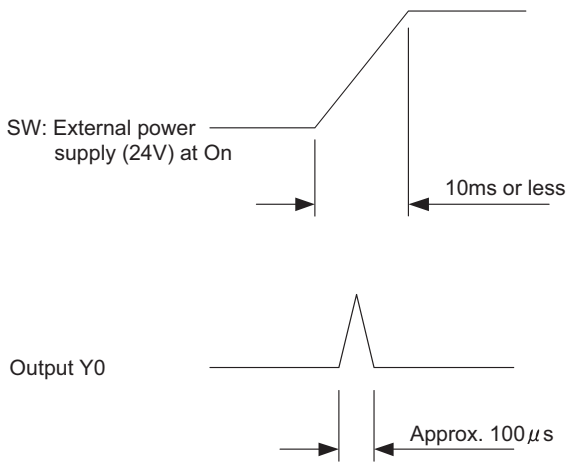 	When the external power turns ON/OFF, check that the external power supply rising edge must be 10ms or more, and switch the SW1 to the primary side of external power supply. 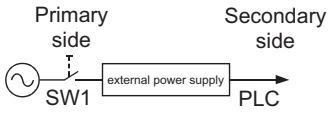 When switching to the secondary side of the external power supply is required, the external power supply rising edge connected a condenser must be slow, and measured 10ms or more. 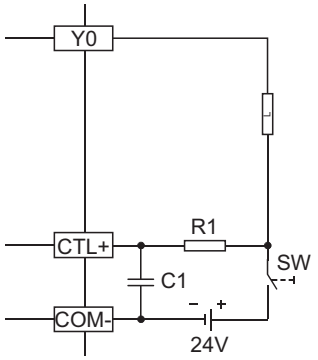 R1: Several tens of ohms Power capacity ≧ (external power supply current*1)^2 × resistance value × (3 to 5)*2 C1: Several hundreds of microfarads 50V *1 Refer to consumption current of the external power supply for modules used in this manual. *2 Select the power capacity of resistance to be 3 to 5 times lager than the actual power consumption. (Example) R1=40 Ω , C1=300 μF Use the below expression to calculated a time constant C1 × R1=300 × 10^{-6} × 40 =12 × 10^{-3}s =12ms

Table 11.3 Faults with the output circuit and the corrective actions (Continued)

	Situation	Cause	Countermeasure
Example 6	The load which was turned OFF is turned ON for a moment at power-off. (Transistor output)	The load [2] which was turned OFF may be turned ON due to back electromotive force at the time of power-off [1] if an inductive load is used. 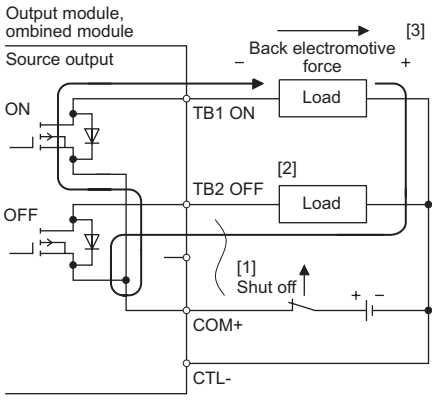 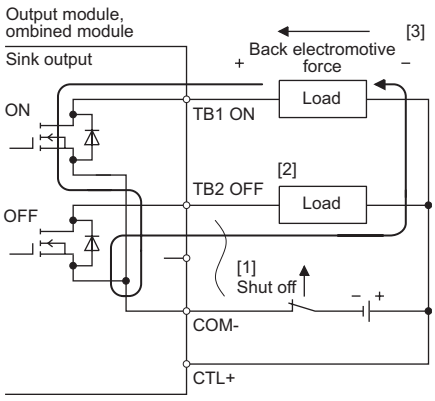 	To prevent the generation of the back electromotive force, connect diode in parallel with load where the back electromotive force has been generated. Source output [3] 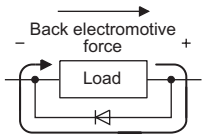 Sink output [3] 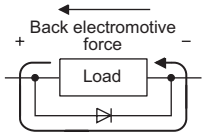

APPENDIX

Appendix1 Instruction List

The instruction list to be used with a PLC is shown.
Refer to the following Programming Manuals for the details of the instructions.

• ACPU/QCPU-A (A Mode) Programming Manual (Fundamentals)	IB-66249
• ACPU Programming Manual (Common Instructions)	IB-66250
• AnSHCPU/AnACPU/AnUCPU/QCPU-A (A Mode) Programming Manual (Dedicated Instructions)	IB-66251
• AnACPU/AnUCPU Programming Manual (AD57 Instructions)	IB-66257
• AnACPU/AnUCPU/QCPU-A (A Mode) Programming Manual (PID Control Instructions)	IB-66258

(1) Sequence instructions

(a) Contact instruction

Contact	LD, LDI, AND, ANI, OR, ORI

(b) Association command

Association	ANB, ORB, MPS, MRD, MPP

(c) Output instruction

Output	OUT, SET, RST, PLS, PLF

(d) Shift instruction

Shift	SFT, SFTP

(e) Master control instruction

Master control	MC, MCR

(f) End instruction

Program end	FEND, END

(g) Other instructions

Stop	STOP
No operation	NOP
Page break (Page break operation for printer output)	NOPLF

(2) Basic instructions

(a) Comparison instructions

=	16 bit	LD=, AND=, OR=
	32 bit	LDD=, ANDD=, ORD=
< >	16 bit	LD<>, AND<>, OR<>
	32 bit	LDD<>, ANDD<>, ORD<>
>	16 bit	LD>, AND>, OR>
	32 bit	LDD>, ANDD>, ORD>
≦	16 bit	LD<=, AND<=, OR<=
	32 bit	LDD<=, ANDD<=, ORD<=
<	16 bit	LD<, AND<, OR<
	32 bit	LDD<, ANDD<, ORD<
≧	16 bit	LD>=, AND>=, OR>=
	32 bit	LDD>=, ANDD>=, ORD>=

(b) BIN arithmetic operation instructions

+ Addition	16 bit	Two types each for +, +P
	32 bit	Two types each for D+, D+P
- Subtraction	16 bit	Two types each for -, -P
	32 bit	Two types each for D-, D-P
* Multiplication	16 bit	*, * P
	32 bit	D *, D *P
/ Division	16 bit	/, /P
	32 bit	D/, D/P
+1 Addition	16 bit	INC, INCP
	32 bit	DINC, DINCP
-1 Subtraction	16 bit	DEC, DECP
	32 bit	DDEC, DDECP

(c) BCD arithmetic operation instructions

+ Addition	BCD 4-digit	Two types each for B+, B+P
	BCD 8-digit	Two types each for DB+, DB+P
- Subtraction	BCD 4-digit	Two types each for B-, B-P
	BCD 8-digit	Two types each for DB, DB-P
* Multiplication	BCD 4-digit	B *, B * P
	BCD 8-digit	DB *, DB *P
/ Division	BCD 4-digit	B/, B/P
	BCD 8-digit	DB/, DB/P

(d) BCD-BIN conversion instructions

BIN→BCD	16 bit	BCD, BCDP
	32 bit	DBCD, DBCDP
BCD→BIN	16 bit	BIN, BINP
	32 bit	DBIN, DBINP

(e) Data transfer instructions

Transfer	16 bit	MOV, MOVP
	32 bit	DMOV, DMOVP
Exchange	16 bit	XCH, XCHP
	32 bit	DXCH, DXCHP
Negation transfer	16 bit	CML, CMLP
	32 bit	DCML, DCMLP
Batch transfer	16 bit	BMOV, BMOVP
Same data batch transfer	16 bit	FMOV, FMOVP

(f) Program branch instructions

Jump	CJ, SCJ, JMP
Subroutine call	CALL, CALLP, RET
Interrupt program enable/disable	EI, DI, IRET

(g) Refresh instructions

Link refresh	COM
Link refresh enable/disable	EI, DI
Partial refresh	SEG

(3) Application instructions

(a) Logical operation instructions

Logical product	16 bit	Two types each for WAND, WANDP
	32 bit	DAND, DANDP
Logical sum	16 bit	Two types each for WOR, WORP
	32 bit	DOR, DORP
Exclusive logical sum	16 bit	Two types each for WXOR, WXORP
	32 bit	DXOR, DXORP
Not exclusive logical sum	16 bit	Two types each for WXNR, WXNRP
	32 bit	DXNR, DXNRP
Complements of 2 (sign highlights)	16 bit	NEG, NEGP

(b) Rotation instructions

Right rotation	16 bit	ROR, RORP, RCR, RCRP
	32 bit	DROR, DRORP, DRCR, DRCRP
Left rotation	16 bit	ROL, ROLP, RCL, RCLP
	32 bit	DROL, DROLP, DRCL, DRCLP

(c) Shift instructions

Right shift	16 bit	SFR, SFRP, BSFR, BSFRP
	Device unit	DSFR, DSFRP
Left shift	16 bit	SFL, SFLP, BSFL, BSFLP
	Device unit	DSFL, DSFLP

(d) Data processing instructions

Data search	16 bit	SER, SERP
Bit check	16 bit	SUM, SUMP
	32 bit	DSUM, DSUMP
Decode	2^n-bit	DECO, DECOP
	16 bit	SEG
Encode	2^n-bit	ENCO, ENCOP
Bit set	16 bit	BSET, BSETP
Bit reset	16 bit	BRST, BRSTP
Separation	16 bit	DIS, DISP
Association	16 bit	UNI, UNIP

(e) FIFO instructions

Write	16 bit	FIFW, FIFWP
Read	16 bit	FIFR, FIFRP

(f) ASCII instructions

ASCII conversion	ASC
ASCII print	PR (two types), PRC

(g) Buffer memory access instructions

Data read	1 word	FROM, FROMP
	2 word	DFRO, DFROP
Data write	1 word	TO, TOP
	2 word	DTO, DTOP

(h) FOR to NEXT instruction

Repeat	FOR, NEXT

(i) Display instructions

Display	LED, LEDC
Display reset	LEDR

(j) Data link module instructions

Data read	1 word	LRDP, RFRP
Data write	1 word	LWTP, RTOP

(k) Other instructions

WDT reset		WDT, WDTP
Error check		CHK
Status latch		SLT, SLTR
Sampling trace		STRA, STRAR
Carry flag set/reset	1 bit	STC, CLC
Timing clock	1 bit	DUTY

(4) Dedicated instructions

(a) Direct processing instructions

Direct output	DOUT
Direct set	DSET
Direct reset	DRST

(b) Structured program instructions

Circuit index modification	IX, IXEND
Repeat forced end	BREAK
Subroutine call	FCALL
Error check circuit pattern change	CHK, CHKEND

(c) Data operation instructions

32-bit data search	DSER
16-bit upper/lower byte swap	SWAP
Data separation	DIS
Data association	UNI
Bit test	TEST, DTEST

(d) I/O operation instructions

Flip-flop control	FF
Numeral key input from keyboard	KEY

(e) Real value processing instructions (BCD format processing)

BCD 4-digit square root	BSQR
BCD 8-digit square root	BDSQR
SIN (sine) operation	BSIN
COS (cosine) operation	BCOS
TAN (tangent) operation	BTAN
SIN^{-1}(arcsine) operation	BASIN
COS^{-1} (arccosine) operation	BACOS
TAN^{-1} (arctangent) operation	BATAN

(f) Real value processing instructions (Floating point format real value processing)

Real value → 16/32-bit BIN conversion	INT, DINT
16/32-bit BIN → real value conversion	FLOAT, DFLOAT
Addition	ADD
Subtraction	SUB
Multiplication	MUL
Division	DIV
Angle → radian conversion	RAD
Radian → angle conversion	DEG
SIN (sine) operation	BSIN
COS (cosine) operation	BCOS
TAN (tangent) operation	BTAN
SIN^{-1}(arcsine) operation	BASIN
COS^{-1} (arccosine) operation	BACOS
TAN^{-1} (arctangent) operation	BATAN
Square root	SQR
Exponential	EXP
Logarithm	LOG

(g) Text string processing instructions

16/32-bit BIN → decimal ASCII conversion	BINDA, DBINDA
16/32-bit BIN → hexadecimal ASCII conversion	BINHA, DBINHA
16/32-bit BCD → decimal ASCII conversion	BCDDA, DBCDDA
Decimal ASCII → 16/32-bit BIN conversion	DABIN, DDABIN
Hexadecimal ASCII → 16/32-bit BIN conversion	HABIN, DHABIN
Decimal ASCII → 16/32-bit BCD conversion	DABCD, DDABCD
Device data read	COMRD
Text string length detection	LEN
16/32-bit BIN → decimal text string conversion	STR, DSTR
Decimal text string → 16/32-bit BIN conversion	VAL, DVAL
Hexadecimal data → ASCII conversion	ASC
ASCII → hexadecimal data conversion	HEX
Text string transfer	SMOV
Text string association	SADD
Text string comparison	SCMP
Separation in byte units	WTOB
Byte-unit data association	BTOW

(h) Data control instructions

Upper/lower limit control	LIMIT, DLIMIT
Dead zone control	BAND, DBAND
Zone control	ZONE, DZONE

(i) Clock instructions

Clock data read	DATERD
Clock data write	DATEWR

(j) Extension file register instructions

Extension file register block number conversion	RSET
Between extension file registers block transfer	BMOVR
Between extension file registers block exchange	BXCHR
Direct read of extension file register in 1 word unit	ZRRD
Direct read of extension file register in 1 byte unit	ZRRDB
Direct write of extension file register in 1 word unit	ZRWR
Direct write of extension file register in 1 byte unit	ZRWRB

(k) Data link instructions
*1: New instructions set for exclusive use with AnUCPU

	Local station word device read	LRDP
	Local station word device write	LWTP
	Data read from remote I/O station special function module	RFRP
	Data write from remote I/O station special function module	RTOP
*1	Word device read from connected station	ZNRD
*1	Word device write to connected station	ZNWR
*1	Network refresh instruction	ZCOM

(l) AD61(S1) high-speed counter module control instructions
(The AD61 dedicated instructions cannot be executed with A1SD61.)

Preset value data setting	PVWR1, PVWR2
Write setting data for large/small/match identification	SVWR1, SVWR2
Present value read from CH1/CH2	PVRD1, PVRD2

(m) AJ71C24(S8) computer link module control instructions

Data send	Character up to 00H code	PR
	Intended number of characters	PRN
Data receive		INPUT
Communication status read		SPBUSY
Communication processing forced interruption		SPCLR

(n) AJ71C21(S1) terminal interface module control instructions

Data output to RS-232C (data up to 00H code)	PR2
Data output to RS-422 (data up to 00H code)	PR4
Data output to RS-232C (for number of intended points)	PRN2
Data output to RS-422 (for number of intended points)	PRN4
Data read input from RS-232C	INPUT2
Data input from RS-422	INPUT4
Data read from RAM	GET
Data write to RAM	PUT
Communication status read	SPBUSY
Communication processing forced interruption	SPCLR

(o) MELSECNET/MINI-S3 master module control instructions

Key input from operation box	INPUT
Data send/receive for specified number of bytes to/ from AJ35PTF-R2	PR, PRN, INPUT
Data read/write for MINI standard protocol module	MINI
Error reset for remote terminal module	MINIERR
Communication status read	SPBUSY
Communication status forced interruption	SPCLR

(p) PID operation instructions

Control data setting	PIDINIT
PID operation	PIDCONT
PID operation result monitoring for AD57(S1)	PID57

(q) AD59(S1) memory card/centronix interface module control instructions

Output to printer	Character up to 00H code	PR
	Intended number of characters	PRN
Data read to memory card		GET
Data write to memory card		PUT

(r) AD57(S1) control instructions

Display mode setting instruction		CMODE
Screen display control instructions	Canvas screen display	CPS1
	VRAM display address change	CPS2
	Canvas transfer	CMOV
	Screen clear	CLS
	VRAM clear	CLV
	Scroll up/down	CSCRU, CSCRD
Cursor control instructions	Cursor display	CON1, CON2
	Cursor erase	COFF
	Cursor position setting	LOCATE
Display condition setting instructions	Forward/reverse rotation of characters to be displayed	CNOR, CREV
	Forward/reverse rotation of characters	CRDSP, CRDSPV
	Character color specification	COLOR
	Character color change	CCDSP, CCDSPV

(Continued)

Specified character display instructions	ASCII character display	PR, PRN
	ASCII character write	PRV, PRNV
	Character display	EPR, EPRN
	Character write	EPRV, EPRNV
	Continuous display of same character	CR1, CR2, CC1, CC2
Fixed character display instructions	- (minus) display	CINMP
	- (hyphen) display	CINHP
	. (period, decimal point) display	CINPT
	Numeric character display	CIN0 to CIN9
	Alphanumeric character display	CINA to CINZ
	Space display	CINSP
Specified column clear instruction		CINCLR
Conversion instructions for displayed text string into ASCII code		INPUT
VRAM data control instructions	Data read	GET
	Data write	PUT
Display status read instruction		STAT

(s) CC-Link dedicated instructions

Network parameter setting	RLPA
Automatic refresh parameter setting	RRPA
Read from the auto refresh buffer memory of the intelligent device station	RIFR
Write to the auto refresh buffer memory of the intelligent device station	RITO
Read from the buffer memory of the intelligent device station	RIRD
Write to the buffer memory of the intelligent device station	RIWT
Write to the buffer memory of the intelligent device station (with handshake)	RISEND
Read from the buffer memory of the intelligent device station (with handshake)	RIRCV

Appendix1.1 Precautions for write during RUN of a dedicated instruction

Contents of write during RUN	In the case of LEDA	In the case of LEDB
Write normal configuration during RUN	After writing, the instruction is executed with the previous contact ON.	After writing, the instruction is executed when the previous contact is turned from OFF to ON.
LEDA/LEDB was added by mistake.	Detailed error code, 104 is reported.	If the previous contact remains ON after writing, no execution causes no processing and detailed error code, 104 is reported when the previous contact is turned from OFF to ON.
LEDA/LEDB was deleted by mistake.	LEDC/SUB/LEDR is handled as a normal instruction.	
LEDC/SUB was added by mistake.	Detailed error code, 104 is reported.	If the previous contact remains ON after writing, no execution causes no processing and detailed error code, 104 is reported when the previous contact is turned from OFF to ON.
LEDC/SUB was deleted by mistake.	Detailed error code, 104 is reported.	If the previous contact remains ON after writing, no execution causes no processing and detailed error code, 104 is reported when the previous contact is turned from OFF to ON.
LEDR was added by mistake.	LEDR in the back is handled as a normal instruction.	LEDR in the back is handled as a normal instruction.
LEDR was deleted by mistake.	If no LEDR exists immediately after the deleted LEDR, detailed error code, 104 is reported.	If no LEDR exists immediately after the deleted LEDR, detailed error code, 104 is reported. When the LEDR exists, all instructions found between them are not executed.

REMARK

The detailed error code 104 means that the configuration of the program using dedicated CC-Link instructions is not correct. (Refer to Section 11.3.2)

Appendix 2 LISTS OF SPECIAL RELAYS AND SPECIAL REGISTERS

Appendix 2.1 List of Special Relays

The special relays are the internal relays that have specific applications in the sequencer. Therefore, do not turn the special register ON/OFF on the program. (Except for the ones marked by *1 or *2 in the table.)

Table App2.1 Special Relay List

Number	Name	Description	Details	Applicable CPU	
*1 M9000	Fuse blown	OFF:Normal ON: Fuse blown unit	• Turned on when there is one or more output units of which fuse has been blown or external power supply has been turned off (only for small type). Remains on if normal status is restored. Output modules of remote I/O stations are also checked fore fuse condition.	○	Usable with all types of CPUs (Only remote I/O station information is valid for A2C.)
*2 M9002	I/O unit verify error	OFF:Normal ON: Error	• Turned on if the status of I/O module is different from entered status when power is turned on. Remains on if normal status is restored. I/O module verification is done also to remote I/O station modules. (Reset is enabled only when special registers D9116 to D9123 are reset.)	○	Usable with all types of CPUs (Only remote I/O station information is valid for A2C.)
M9004	MINI link master module error	OFF:Normal ON: Error	• Turned on when the MINI (S3) link error is detected on even one of the MINI (S3) link modules being loaded. Remains on if normal status is restored.	—	Dedicated to AnA, A2AS, AnU and QCPU-A (A Mode).
*1 M9005	AC DOWN detection	OFF:AC power good ON: AC power DOWN	• Turned on when an momentary power failure of 20 msec or less occurred. Reset when POWER switch is moved from OFF to ON position.	○	Usable with all types of CPUs.
M9006	Battery low	OFF:Normal ON: Battery low	• Turned on when battery voltage reduces to less than specified. Turned off when battery voltage becomes normal.	○	Usable with all types of CPUs.
*1 M9007	Battery low latch	OFF:Normal ON: Battery low	• Turned on when battery voltage reduces to less than specified. Remains on if battery voltage becomes normal	○	Usable with all types of CPUs.
*1 M9008	Self-diagnostic error	OFF:No error ON: Error	• Turned on when error is found as a result of self-diagnosis.	○	Usable with all types of CPUs.
M9009	Annunciator detection	OFF:No detection ON: Detected	• Turned on when OUT F of SET F instruction is executed. Switched off when D9124 data is zeroed.	○	Usable with all types of CPUs.
M9010	Operation error flag	OFF:No error ON: Error	• Turned on when operation error occurs during execution of application instruction. Turned off when error is eliminated.	△	Unusable with A3H, A3M, AnA, A2AS, A3A board, AnU and QCPU-A (A Mode).
*1 M9011	Operation error flag	OFF:No error ON: Error	• Turned on when operation error occurs during execution of application instruction. Remains on if normal status is restored.	○	Usable with all types of CPUs.
M9012	Carry flag	OFF:Carry off ON: Carry on	• Carry flag used in application instruction.	○	Usable with all types of CPUs.

Table App2.1 Special Relay List (Continue)

Number	Name	Description	Details	Applicable CPU	
M9016	Data memory clear flag	OFF: No processing ON: Output clear	• Clears the data memory including the latch range (other than special relays and special registers) in remote run mode from computer, etc. when M9016 is on.	○	Usable with all types of CPUs.
M9017	Data memory clear flag	OFF:No processing ON: Output clear	• Clears the unlatched data memory (other than special relays and special registers) in remote run mode from computer, etc. when M9017 is on.	○	Usable with all types of CPUs.
*2 M9018	Data link monitor switching	OFF:F link ON: R link	• Specifies the lines to be monitored for link monitoring.	—	Dedicated to A3V.
M9020	User timing clock No. 0	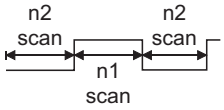	• Relay that repeats on/off at intervals of predetermined scan. • When power is turned on or reset is per-formed, the clock starts with off. • Set the intervals of on/off by DUTY instruction. 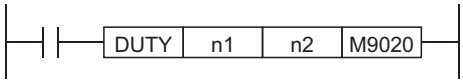	○	Usable with all types of CPUs.
M9021	User timing clock No. 1				
M9022	User timing clock No. 2				
M9023	User timing clock No. 3				
M9024	User timing clock No. 4				
*2 M9025	Clock data set request	OFF:No processing ON: Set requested	• Writes clock data from D9025-D9028 to the clock element after the END instruction is executed during the scan in which M9025 has changed from off to on.	△	Unusable with An, A3H, A3M, A3V, A2C and A0J2H.
M9026	Clock data error	OFF:No error ON: Error	• Switched on by clock data (D9025 to D9028) error and switched off without an error.	△	Unusable with An, A3H, A3M, A3V, A2C and A0J2H.
M9027	Clock data display	OFF:No processing ON: Display	• Clock data such as month, day, hour, minute and minute are indicated on the CPU front LED display.	△	Usable with A3N, A3A, A3U, A4U, A73 and A3N board.
*2 M9028	Clock data read request	OFF:No processing ON: Read request	• Reads clock data to D9025-D9028 in BCD when M9028 is on.	△	Unusable with An, A3H, A3M, A3V, A2C and A0J2H.
*2 M9029	Data communication request batch process	OFF:No batch process ON: Batch process	• Turn M9029 on in the sequence program to process all data communication requests, which have been received in the entire scan, during END process of the scan. • The data communication request batch process can be turned on or off during operation. • OFF in default state (Each data communication request is processed at the END process in the order of reception.)	△	Usable with AnU and A2US(H).

Table App2.1 Special Relay List (Continue)

Number	Name	Description	Details	Applicable CPU	
M9030	0.1 second clock	0.05 seconds 0.05 seconds	• 0.1 second, 0.2 second, 1 second, 2 second, and 1 minute clocks are generated. • Not turned on and off per scan but turned on and off even during scan if corresponding time has elapsed. • Starts with off when power is turned on or reset is performed.	△	Unusable with A3V.
M9031	0.2 second clock	0.1 seconds 0.1 seconds			
M9032	1 second clock	0.5 seconds 0.5 seconds			
M9033	2 second clock	1 second 1 second			
M9034	1 minute clock	30 seconds 30 seconds			
M9036	Normally ON	ON OFF	• Used as dummy contacts of initialization and application instruction in sequence program. • M9036 and M9037 are turned on and off without regard to position of key switch on CPU front. M9038 and M9039 are under the same condition as RUN status except when the key switch is at STOP position, and turned off and on. Switched off if the key switch is in STOP position. M9038 is on for one scan only and M9039 is off for one scan only if the key switch is not in STOP position.	○	Usable with all types of CPU
M9037	Normally OFF	ON OFF			
M9038	On only for 1 scan after run	ON OFF 1 scan			
M9039	RUN flag (off only for 1 scan after run)	ON OFF 1 scan			
M9040	PAUSE enable coil	OFF:PAUSE disabled ON: PAUSE enabled	• When RUN key switch is at PAUSE position or remote pause contact has turned on and if M9040 is on, PAUSE mode is set and M9041 is turned on.	○	Usable with all types of CPU
M9041	PAUSE status contact	OFF:Not during pause ON: During pause			
M9042	Stop status contact	OFF:Not during stop ON: During stop	• Switched on when the RUN key switch is in STOP position.	○	Usable with all types of CPU
M9043	Sampling trace completion	OFF:During sampling trace ON: Sampling trace completion	• Turned on upon completion of sampling trace performed the number of times preset by parameter after STRA instruction is executed. Reset when STRAR instruction is executed.	△	Unusable with A1 and A1N.
M9044	Sampling trace	OFF → ON: STRA Same as execution ON → OFF: STRAR Same as execution	• Turning on/off M9044 can execute STRA / STRAR instruction. (M9044 is forcibly turned on/off by a peripheral device.) When switched from OFF to ON: STRA instruction When switched from ON to OFF: STRAR instruction The value stored in D9044 is used as the condition for the sampling trace. At scanning, at time → Time (10 msec unit)	△	Unusable with A1 and A1N.
M9045	Watchdog timer (WDT) reset	OFF:WDT not reset ON: WDT reset	• Turn on M9045 to reset the WDT upon execution of a ZCOM instruction or data communication request batch process. (Use this function for scan times exceeding 200 ms.)	△	Unusable with A1 and A1N.

Table App2.1 Special Relay List (Continue)

Number	Name	Description	Details	Applicable CPU	
M9046	Sampling trace	OFF: Except during trace ON: During trace	• Switched on during sampling trace.	△	Unusable with A1 and A1N.
M9047	Sampling trace preparation	OFF: Sampling trace stop ON: Sampling trace start	• Turn on M9047 to execute sampling trace. Sampling trace is interrupted if M9047 is turned off.	△	Unusable with A1 and A1N.
*2 M9048	RUN LED flicker flag	ON: Flickers at annunciator on. OFF: No flicker at annunciator on.	• Sets whether the RUN LED flickers or not when the annunciator relay F⬚ is turned on when the A0J2H is used.	—	Usable with A0J2H.
M9048	Memory card battery voltage detection	OFF: Low voltage is not detected. ON: Low voltage is detected.	• Turned ON when the drop in the battery voltage for the memory card is detected. (Automatically turned OFF when the voltage recovers to normal.)	—	Dedicated to QCPU-A (A Mode)
M9049	Switching the number of output characters	OFF: Up to NUL code are output. ON: 16 characters are output.	• When M9049 is off, up to NUL (00_H) code are output. • When M9049 is on, ASCII codes of 16 characters are output.	△	Unusable with An, A3V, A2C and A52G
*2 M9050	Operation result storage memory change contact (for CHG instruction)	OFF: Not changed ON: Changed	• Switched on to exchange the operation result storage memory data and the save area data.	—	Dedicated to A3
M9051	CHG instruction execution disable	OFF: Enable ON: Disable	• Switched on to disable the CHG instruction. • Switched on when program transfer is requested and automatically switched off when transfer is complete.	—	Usable with A3, A3N, A3H, A3M, A3V, A3A, A3U, A4U, A73 and A3N board
*2 M9052	SEG instruction switching	OFF: 7SEG display ON: Partial refresh	• Switched on to execute the SEG instruction as a partial refresh instruction. Switched off to execute the SEG instruction as a 7SEG display instruction.	△	Unusable with An, A3H, A3M, A3V, AnA, AnU, A3V and A3A board
*2 M9053	EI / DI instruction switching	OFF: Sequence interrupt control ON: Link interrupt control	• Switched on to execute the link refresh enable, disable (EI, DI) instructions.	△	Unusable with An, A3V and A3N board
M9054	STEP RUN flag	OFF: Other than step run ON: During step run	• Switched on when the RUN key switch is in STEP RUN position.	△	Unusable with An, AnS, AnSH, A1FX, A2C, A0J2H, and A52G
M9055	Status latch complete flag	OFF: Not complete ON: Complete	• Turned on when status latch is completed. Turned off by reset instruction.	△	Unusable with A1 and A1N.
M9056	Main program P, I set request	OFF: Other than P, I set request ON: P, I set request	• Provides P, I set request after transfer of the other program (for example subprogram when main program is being run) is complete during run. Automatically switched off when P, I setting is complete.	—	Usable with A3, A3N, A3H, A3M, A3V, A3A, A73, A3U, A4U and A3N board
M9057	Subprogram 1 P, I set request	OFF: Except during P, I set request ON: During P, I set request			
M9060	Subprogram 2 P, I set request			—	Dedicated to A4U
M9061	Subprogram 3 P, I set request				

Table App2.1 Special Relay List (Continue)

Number	Name	Description	Details	Applicable CPU	
M9060	Remote terminal error	OFF: Normal ON: Error	• Turned on when one of remote terminal modules has become a faulty station. (Communication error is detected when normal communication is not restored after the number of retries set at D9174.) • Turned off when communication with all re-mote terminal modules is restored to normal with automatic online return enabled. • Remains on when automatic online return is disabled. • Not turned on or off when communication is suspended at error detection.	—	Usable with A2C and A52G
M9061	Communication error	OFF: Normal ON: Error	• Turned on when communication with a remote terminal module or an I/O module is faulty. • Communication error occurs due to the following reasons. • Initial data error • Cable breakage • Power off for remote terminal modules or I/O modules • Turned off when communication is restored to normal with automatic online return enabled • Remains on when communication is suspended at error detection with automatic online return disabled.	—	Usable with A2C and A52G
M9065	Divided transfer status	OFF: Other than divided processing ON: Divided processing	• Turned on when canvas screen transfer to AD57 (S1)/AD58 is done by divided processing, and turned off at completion of divided processing.	—	Usable with AnA, and AnU.
*2 M9066	Transfer processing switching	OFF: Batch transfer ON: Divided transfer	• Turned on when canvas screen transfer to AD57 (S1)/AD58 is done by divided processing.	—	Usable with AnA, and AnU.
M9067	I/O module error detection	OFF: Normal ON: Error	• Turned on when one of I/O modules has become a faulty station. (Communication error is detected when normal communication is not restored after the number of retries set at D9174.) • Turned off when communication with all I/O modules is restored to normal with automatic online return enabled. • Remains on when automatic online return is disabled. • Not turned on or off when communication is suspended at error detection.	—	Usable with A2C and A52G.
M9068	Test mode	OFF: Automatic online return enabled Automatic online return disabled Communication suspended at online error ON: Line check	• Turned on when line check with I/O modules and remote terminal modules is performed. • Turned off when communication with I/O modules and remote terminal modules is per-formed.	—	Usable with A2C and A52G.
M9069	Output at line error	OFF: All outputs are turned off. ON: Outputs are retained.	• Sets whether all outputs are turned off or retained at communication error. OFF: All outputs are turned off at communication error. ON: Outputs before communication error are retained.	—	Usable with A2C and A52G.

Table App2.1 Special Relay List (Continue)

Number	Name	Description	Details	Applicable CPU	
M9070 *2	Time required for search of A8UPU/A8PUJ	OFF: Reading time reduction OFF ON: Reading time reduction ON	• Turn on to reduce the search time of A8UPU/A8PUJ. (In this case, the scan time of the CPU module extends by 10%.)	△	Usable with AnU and A2US(H).
M9073 *1	WDT error flag	OFF: No WDT error ON: WDT error	• Turns on when WDT error is detected by the self-check of the PCPU.	—	Dedicated to A73.
M9073	Clock data set request	OFF: No processing ON: Set request is made	• The clock data registered in D9073 to D9076 is written to the clock device after the execution of the END instruction of the scan in which the state of M9073 changes from OFF to ON.	—	Dedicated to A2CCPUC24 (-PRF)
M9073	Setting of writing to flash ROM	OFF: Disables writing to ROM ON: Enables writing to ROM	• Turned on to enable writing to the flash ROM. (DIP switch 3 should be set to ON.)	—	Dedicated to QCPU-A (A Mode)
M9074	PCPU ready complete flag	OFF: PCPU ready incomplete ON: PCPU ready complete	• Set if the motor is not running when it is checked at PC ready (M2000) on. Turned off when M2000 is turned off.	—	Dedicated to A73.
M9074	Clock data error	OFF: No error ON: Error occurred	• This goes ON when a clock data (D9073 to D9076) error occurs. This remains OFF when there is no error.	—	Dedicated to A2CCPUC24 (-PRF)
M9074	Request for writing to flash ROM	OFF → ON: Starts writing to ROM	• When turned from OFF to ON, writing to the built-in ROM is started.	—	Dedicated to QCPU-A (A Mode)
M9075	Test mode flag	OFF: Other than test mode ON: Test mode	• Turned ON when a test mode request is made from a peripheral device. Reset when test mode is finished.	—	Dedicated to A73.
M9075	Successful completion of writing to built-in ROM	OFF: Failed writing to ROM ON: Successfully completed writing to ROM	• Turned on when writing to the built-in ROM is successfully completed. (This status is stored in D9075.)	—	Dedicated to QCPU-A (A Mode)
M9076	External emergency stop input flag	OFF: External emergency stop input is on. ON: External emergency stop input is off.	• Turned off when the external emergency stop input connected to the EMG terminal of A70SF is turned on. Turned on when the external emergency stop input is turned off.	—	Dedicated to A73.
M9076	Clock data read request	OFF: No procesing ON: Read request is made	• When M9076 is ON, clock data is read out to D9073 to D9076 in BCD values.	—	Dedicated to A2CCPUC24 (-PRF)
M9076	Status of writing to built-in ROM	OFF: Writing to ROM disabled ON: Writing to ROM enabled	• Turns ON when writing to built-in ROM is enabled. (Turns ON when DIP switch and M9073 are ON.)	—	Dedicated to QCPU-A (A Mode)
M9077	Manual pulse generator axis setting error flag	OFF: All axes normal ON: Error axis detected	• Turned on when there is an error in the contents of manual pulse generator axis setting. Turned off if all axes are normal when the manual pulse generator enable flag is turned on.	—	Dedicated to A73.

Table App2.1 Special Relay List (Continue)

<table>
<tr><th>Number</th><th>Name</th><th>Description</th><th>Details</th><th colspan="2">Applicable CPU</th></tr>
<tr><td>M9077</td><td>Sequence accumulation time measurement</td><td>OFF: Time not elapsed
ON: Time elapsed</td><td>• Compares the setting value at D9077 with the time elapsed from the start of measurement (accumulation time) at every scan. Then, performs the following operations:
Setting value > Accumulation time:
Turns M9077 ON and clears the accumulation time.
Setting value < Accumulation time:
Turns M9077 from ON to OFF and clears the accumulation time. When M9077 is already OFF, clears the accumulation time.
* When 1 to 255 is designated at D9077, M9077 is turned ON at the first scan.
* When the value other than 1 to 255 is designated at D9077, the value in D9077 is reset to 0 and M9077 is always turned OFF.</td><td>—</td><td>Dedicated to QCPU-A (A Mode)</td></tr>
<tr><td>M9078</td><td>Test mode request error flag</td><td>OFF: No error
ON: Error</td><td>• Turned on when test mode is not available though a test mode request was made from a peripheral device. Turned off if test mode becomes available by making another test mode request.</td><td>—</td><td>Dedicated to A73.</td></tr>
<tr><td>M9079</td><td>Servo program setting error flag</td><td>OFF: No data error
ON: Data error</td><td>• Turned on when the positioning data of the servo program designated by the DSFRP instruction has an error.
Turned off when the data has no error after the DSFRP instruction is executed again.</td><td>—</td><td>Dedicated to A73.</td></tr>
<tr><td>M9080</td><td>BUSY flag for execution of CC-Link dedicated instruction</td><td>OFF: Number of remaining instructions executable simultaneously: 1 to 10
ON: Number of remaining instructions executable simultaneously: 0</td><td>Turned ON/OFF according to the number of remaining instructions (RIRD / RIWT / RISEND / RIRCV) being executable simultaneously at one scan.
OFF: Number of remaining instructions executable simultaneously: 1 to 10
ON: Number of remaining instructions executable simultaneously: 0
By assigning M9080 as execution condition, the number of instructions above executed simultaneously at one scan can be limited to 10 or less.
*4: This function is available with the CPU of the following S/W versions or later.
<table>
<tr><th>CPU Type Name</th><th>Software Version</th></tr>
<tr><td>Q02CPU-A, Q02HCPU-A, Q06HCPU-A</td><td rowspan="2">Available with all versions</td></tr>
<tr><td>A1SJHCPU, A1SHCPU, A2SHCPU</td></tr>
<tr><td>A2UCPU(S1), A3UCPU, A4UCPU</td><td>S/W version Q (Manufactured in July, 1999)</td></tr>
<tr><td>A2USCPU(S1)</td><td>S/W version E (Manufactured in July, 1999)</td></tr>
<tr><td>A2USHCPU-S1</td><td>S/W version L (Manufactured in July, 1999)</td></tr>
</table></td><td>△</td><td>Can be used only with AnU, A2US, or AnSH, QCPU-A (A Mode) *4</td></tr>
</table>

Table App2.1 Special Relay List (Continue)

Number	Name	Description	Details	Applicable CPU	
M9081	Registration area busy signal for communication request	OFF: Communication request to remote terminal modules enabled ON: Communication request to remote terminal modules disabled	• Indication of communication enable/disable to remote terminal modules connected to the MINI (S3) link module, A2C or A52G.	—	Usable with AnA, AnA, AnU, A2AS, QCPU-A (A Mode) A2C and A52G.
M9082	Final station number disagreement	OFF: Final station number agreement ON: Final station number disagreement	• Turned on when the final station number of the remote terminal modules and remote I/O modules connected to the A2C or A52G disagrees with the total number of stations set in the initial setting. • Turned off when the final station number agrees with the total number of stations at STOP → RUN	—	Dedicated to A2C and A52G.
*2 M9084	Error check	OFF: Checks enabled ON: Checks disabled	• Specify whether the following errors are to be checked or not after the END instruction is executed (to set END instruction processing time): • Fuse blown • I/O unit verify error • Battery error	△	Unusable with An, A2C and A3V.
M9086	BASIC program RUN flag	OFF: A3M-BASIC stop ON: A3M-BASIC run	• Turned on when the A3M-BASIC is in RUN state, and turned off when it is in STOP state.	—	Dedicated to A3M
M9087	BASIC program PAUSE flag	OFF: A3M-BASIC RUN enable ON: A3M-BASIC disable	• Specifies enable/disable of A3M-BASIC execution when the A3MCPU is in PAUSE state. OFF: A3M-BASIC is executed. ON: A3M-BASIC is not executed.	—	Dedicated to A3M.
M9090	Power supply problem status on the PC side	OFF: Normal ON: Power off	• Turns on if the power to the PC side is shut off when the external power supply is connected to the CPU board. It stays on even after the status becomes normal.	—	Dedicated to A2USH board
*1 M9091	Operation error detail flag	OFF: No error ON: Error	• Turned on when an operation error detail factor is stored at D9091, and remains ON after normal state is restored.	—	Usable with AnA, A2AS, AnU and QCPU-A (A Mode).
*1 M9091	Microcomputer subroutine call error flag	OFF: No error ON: Error	• Turned on when an error occurred at execution of the microcomputer program package, and remains ON after normal state is restored.	—	Unusable with AnA, A2AS, AnU and QCPU-A (A Mode).
M9092	External power supply problem status	OFF: Normal ON: Power off	• Turns on when the external power being supplied to the CPU board is shut off. It stays on even after the status becomes normal.	—	Dedicated to A2USH board
M9092	Duplex power supply overheat error	OFF: Normal ON: Overheat	• Turned on when overheat of a duplex power supply module is detected.	—	Dedicated to A3V.
M9093	Duplex power supply error	OFF: Normal ON: Failure or AC power supply down	• Turned on when a duplex power supply module caused failure or the AC power supply is cut down.	—	Dedicated to A3V.

Table App2.1 Special Relay List (Continue)

Number	Name	Description	Details	Applicable CPU	
*2 *3 M9094	I/O change flag	OFF: Changed ON: Not changed	• After the head address of the required I/O module is set to D9094, switching M9094 on allows the I/O module to be changed in online mode. (One module is only allowed to be changed by one setting.) • To be switched on in the program or peripheral device test mode to change the module during CPU RUN. To be switched on in peripheral device test mode to change the module during CPU STOP. • RUN/STOP mode must not be changed until I/O module change is complete.	—	Usable with An, AnN, AnA, AnU.
M9095	Duplex operation verify error	OFF: Normal ON: Duplex operation verify error	• During duplex operation of the operating CPU with a stand-by CPU, verification is performed by the both to each other. Turned on when a verify error occurred.	—	Dedicated to A3V.
M9096	A3VCPU A selfcheck error	OFF: No error ON: Error	• Turn on when a self-check error occurred on the A3VCPU A mounted next to the A3VTU.	—	Dedicated to A3V.
M9097	A3VCPU B selfcheck error	OFF: No error ON: Error	• Turn on when a self-check error occurred on the A3VCPU B mounted next to the A3VCPU A.	—	Dedicated to A3V.
M9098	A3VCPU C selfcheck error	OFF: No error ON: Error	• Turn on when a self-check error occurred on the A3VCPU C mounted next to the A3VCPU B.	—	Dedicated to A3V.
M9099	A3VTU selfcheck error	OFF: No error ON: Error	• Turned on when a self-check error occurred on the A3VTU.	—	Dedicated to A3V.
M9100	SFC program registration	OFF: No SFC program ON: SFC program registered	• Turned on if the SFC program is registered, and turned off if it is not.	—	Usable with AnN*, AnA*, AnU, A2AS, QCPU-A (A Mode), A2C, A0J2H, AnS, AnSH, A1FX and A52G.
*2 M9101	SFC program start/stop	OFF: SFC program stop ON: SFC program start	• Should be turned on by the program if the SFC program is to be started. If turned off, operation output of the execution step is turned off and the SFC program is stopped.	—	Usable with AnN*, AnA*, AnU, A2AS, QCPU-A (A Mode), A2C, A0J2H, AnS, AnSH, A1FX and A52G.
*2 M9102	SFC program starting status	OFF: Initial start ON: Continuous start	• Selects the starting step when the SFC program is restarted using M9101. ON: Started with the step of the block being executed when the program stopped. OFF: All execution conditions when the SFC program stopped are cleared, and the program is started with the initial step of block 0. • Once turned on, the program is latched in the system and remains on even if the power is turned off. Should be turned off by the sequence program when turning on the power, or when starting with the initial step of block 0.	—	Usable with AnN*, AnA*, AnU, A2AS, QCPU-A (A Mode), A2C, A0J2H, AnS, AnSH, A1FX and A52G.

*: Usable with AnN and AnA which are compatible with SFC.
For the AnN and AnA which are compatible with SFC, refer to the MELSAP-II Programming Manual.

Table App2.1 Special Relay List (Continue)

Number	Name	Description	Details	Applicable CPU	
M9103 *2	Consecutive step transfer enable/disable	OFF: Consecutive step transfer disable ON: Consecutive step transfer enable	• Selects consecutive or step-by-step transfer of steps of which transfer conditions are established when all of the transfer conditions of consecutive steps are established. ON: Consecutive transfer is executed. OFF: One step per one scan is transferred.	—	Usable with AnN*, AnA*, AnU, A2AS, QCPU-A (A Mode), A2C, A0J2H, AnS, AnSH, A1FX and A52G.
M9104	Consecutive transfer prevention flag	OFF: Transfer complete ON: Transfer incomplete	• Turned on when consecutive transfer is not executed with consecutive transfer enabled. Turned off when transfer of one step is completed. Consecutive transfer of a step can be prevented by writing an AND condition to corresponding M9104.	—	Usable with AnN*, AnA*, AnU, A2AS, QCPU-A (A Mode), A2C, A0J2H, AnS, AnSH, A1FX and A52G.
M9108 *2	Step transfer monitoring timer start (corresponds to D9108)	OFF: Monitoring timer reset ON: Monitoring timer reset start	• Turned on when the step transfer monitoring timer is started. Turned off when the monitoring timer is reset.	—	Usable with AnN*, AnA*, AnU, A2AS, QCPU-A (A Mode), A2C, A0J2H, AnS, AnSH, A1FX and A52G.
M9109 *2	Step transfer monitoring timer start (corresponds to D9109)				
M9110 *2	Step transfer monitoring timer start (corresponds to D9110)				
M9111 *2	Step transfer monitoring timer start (corresponds to D9111)				
M9112 *2	Step transfer monitoring timer start (corresponds to D9112)				
M9113 *2	Step transfer monitoring timer start (corresponds to D9113)				
M9114 *2	Step transfer monitoring timer start (corresponds to D9114)				

*: Usable with AnN and AnA which are compatible with SFC.
For the AnN and AnA which are compatible with SFC, refer to the MELSAP-II Programming Manual.

Table App2.1 Special Relay List (Continue)

Number	Name	Description	Details	Applicable CPU	
M9180	Active step sampling trace complete flag	OFF: Trace start ON: Trace complete	• Turned on when sampling trace of all specified blocks is completed. Turned off when sampling trace is started.	—	Usable with AnN*, AnA*, AnU, A2AS, QCPU-A (A Mode), A2C, A0J2H, AnS, AnSH, A1FX and A52G.
M9181	Active step sampling trace execution flag	OFF: Trace not executed. ON: Trace being executed.	• Turned on when sampling trace is being executed. Turned off when sampling trace is completed or suspended.	—	Usable with AnN*, AnA*, AnU, A2AS, QCPU-A (A Mode), A2C, A0J2H, AnS, AnSH, A1FX and A52G.
M9182 *2	Active step sampling trace enable	OFF: Trace disable/ suspend ON: Trace enable	• Selects sampling trace execution enable/disable. ON: Sampling trace execution is enabled. OFF: Sampling trace execution is disabled. If turned off during sampling trace execution, trace is suspended.	—	Usable with AnN*, AnA*, AnU, A2AS, QCPU-A (A Mode), A2C, A0J2H, AnS, AnSH, A1FX and A52G.
M9196 *2	Operation output at block stop	OFF: Coil output off ON: Coil output on	• Selects the operation output when block stop is executed. ON: Retains the ON/OFF status of the coil being used by using operation output of the step being executed at block stop. OFF: All coil outputs are turned off. (Operation output by the SET instruction is retained regardless of the ON/OFF status of M9196.)	—	Usable with AnN*, AnA*, AnU, A2AS, QCPU-A (A Mode), A2C, A0J2H, AnS, AnSH, A1FX and A52G.
M9197 M9198	Fuse blow, I/O verify error display switching	M9197 / M9198 / I/O numbers to be displayed OFF / OFF / X/Y0 to 7F0 ON / OFF / X/Y800 to FF0 OFF / ON / X/Y1000 to 17F0 ON / ON / X/Y1800 to 1FF0	• Switches I/O numbers in the fuse blow module storage registers (D9100 to D9107) and I/O module verify error storage registers (D9116 to D9123) according to the combination of ON/OFF of the M9197 and M9198.	—	Usable with AnU, A2AS and QCPU-A (A Mode)
M9199	Data recovery of online sampling trace / status latch	OFF: Data recovery OFF ON: Data recovery ON	• When sampling trace / status latch is executed, the setting data stored in the CPU module is recovered to enable restart. • Turn on M9199 to execute again. (There is no need to write data with the peripheral device.)	—	Usable with AnU, A2AS and QCPU-A (A Mode)

*: Usable with AnN and AnA which are compatible with SFC.
For the AnN and AnA which are compatible with SFC, refer to the MELSAP-II Programming Manual.

POINTS

(1) Contents of the M special relays are all cleared by power off, latch clear or reset with the reset key switch. When the RUN/STOP key switch is set in the STOP position, the contents are retained.

(2) The above relays with numbers marked *1 remain "on" if normal status is restored. Therefore, to turn them "off", use the following method:

(a) Method by use program
Insert the circuit shown at right into the user program and turn on the reset execution command contact to clear the special relay M.

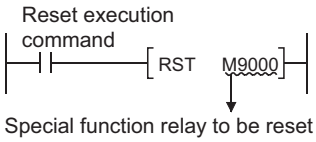

(b) Use the test function of the peripheral device to reset forcibly.
For the operation procedure, refer to the manuals for peripheral devices.

(c) By moving the RESET key switch on the CPU front to the RESET position, the special relays are turned off.

(3) Special relays marked *2 above are switched on/off in the sequence program.

(4) Special relays marked *3 above are switched on/off in test mode of the peripheral equipment.

(5) Turn OFF the following special relays after resetting the related special resisters. Unless the related special registers are reset, the special relays will be turned ON again even if they are turned reset. (Except for the AnU, A2US(H), and QCPU-A (A mode).)

Special Relay	Related Special Resister
M9000	D9100 to D9107
M9001	D9116 to D9123

Appendix 2.2 Special Registers

Special registers are data registers of which applications have been determined inside the PC. Therefore, do not write data to the special registers in the program (except the ones with numbers marked 2 in the table).

Table App2.2 Special Register List

<table>
<tr><th>Number</th><th>Name</th><th>Description</th><th>Details</th><th colspan="2">Applicable CPU</th></tr>
<tr><td>D9000</td><td>Fuse blow</td><td>Fuse blow module number</td><td>• When fuse blown modules are detected, the lowest number of detected units is stored in hexadecimal. (Example: When fuses of Y50 to 6F output modules have blown, "50" is stored in hexadecimal) To monitor the number by peripheral devices, perform monitor operation given in hexadecimal.
(Cleared when all contents of D9100 to D9107 are reset to 0.)
• Fuse blow check is executed also to the output modules of remote I/O stations.</td><td>△</td><td>Unusable with A0J2H.
(Only remote I/O station information is valid for A2C.)</td></tr>
<tr><td>D9001</td><td>Fuse blow</td><td>Fuse blow module number</td><td>• Stores the module numbers corresponding to setting switch numbers or base slot numbers when fuse blow occurred.
<table>
<tr><th colspan="2">I/O Module for A0J2</th><th colspan="2">Extension Base Unit</th></tr>
<tr><td>Setting Switch</td><td>Stored Data</td><td>Base Unit Slot No.</td><td>Stored Data</td></tr>
<tr><td>0</td><td>1</td><td>0</td><td>5</td></tr>
<tr><td>1</td><td>2</td><td>1</td><td>6</td></tr>
<tr><td>2</td><td>3</td><td>2</td><td>7</td></tr>
<tr><td>3</td><td>4</td><td>3</td><td>8</td></tr>
<tr><td>4</td><td>5</td><td></td><td></td></tr>
<tr><td>5</td><td>6</td><td></td><td></td></tr>
<tr><td>6</td><td>7</td><td></td><td></td></tr>
<tr><td>7</td><td>8</td><td></td><td></td></tr>
</table>
• In case of remote I/O station, (module I/O number/10H) + 1 is stored.</td><td>—</td><td>Dedicated to A0J2H.</td></tr>
<tr><td rowspan="2">D9002</td><td rowspan="2">I/O module verify error</td><td rowspan="2">I/O module verify error unit number</td><td>• If an I/O module whose data is different from the entered data when the power is turned on is detected, the head I/O number of the detected module is stored in hexadecimal. When the situation is detected in multiple modules, the lowest number among the module will be stored. (Storing method is the same as that of D9000.) To monitor the number by peripheral devices, perform monitor operation given in hexadecimal.
(Cleared when all contents of D9116 to D9123 are reset to 0.)
• I/O module verify check is executed also to the modules of remote I/O terminals.</td><td>△</td><td>Unusable with A0J2H.
(Only remote I/O station information is valid for A2C.)</td></tr>
<tr><td>• If an I/O module, of which data is different from data entered, is detected when the power in turned on, the I/O number corresponding to the setting switch No. or base unit No. is stored.(Storing method is the same as that of D9001).
• In case of remote I/O station, (module I/O number/10H) + 1 is stored.</td><td>—</td><td>Dedicated to A0J2H.</td></tr>
</table>

Table App2.2 Special Register List (Continue)

Number	Name	Description	Details	Applicable CPU	
D9003	SUM instruction detection bits	The number of bits detected by SUM instruction detection.	• The number of bits detected by execution of the SUM instruction are stored. in BIN code and updated every execution thereafter.	—	Dedicated to A0J2H.
*1 D9004	MINI link master module error	Error detection status	• Error status of the MINI (S3) link detected on loaded MINI (S3) link module is stored. b15 to b8 b7 to b0 8 7 6 5 4 3 2 1 8 7 6 5 4 3 2 1 Data communication between the PLC CPU and MINI (S3) link module is disabled. Bits which correspond to the signals of MINI (S3) link module, shown below, are turned on as the signals are turned on. · Hardware error (X0/X20) · MINI(S3) link error detection (X6/X26) · MINI(S3) link communication error (X7/X27)	—	Usable with AnA, A2AS, AnA board and AnU.
*1 D9005	AC DOWN counter	AC DOWN count	• 1 is added each time input voltage becomes 85% or less of rating while the CPU unit is performing operation, and the value is stored in BIN code.	○	Usable with all types of CPUs.
D9006	Battery low	Indicates the CPU module of which battery voltage is low.	• Bits which correspond to CPU of which battery is low are turned on in D9006, as shown below. B15 B3 B2 B1 B0 0 0 CPU A CPU B CPU C 0: Normal 1: Battery low	—	Dedicated to A3V.
*1 D9008	Shelf-diagnostic error	Self-diagnostic error number	• When error is found as a result of self-diagnosis, error number is stored in BIN code.	○	Usable with all types of CPUs.
D9009	Annunciator detection	F number at which external failure has occurred	• When one of F0 to 255 is turned on by OUT F or SET F , the F number, which has been detected earliest among the F numbers which have turned on, is stored in BIN code. • D9009 can be cleared by RST F or LEDR instruction. If another F number has been detected, the clearing of D9009 causes the next number to be stored in D9009.	△	Unusable with A3, A3N, A3A, A73 and A3N board.
			• When one of F0 to 255 is turned on by OUT F or SET F , the F number, which has been detected earliest among the F numbers which have turned on, is stored in BIN code. • D9009 can be cleared by executing RST F or LEDR instruction or moving INDICATOR RESET switch on CPU front to ON position. If another F number has been detected, the clearing of D9009 causes the nest number to be stored in D9009.	—	Usable with A3, A3N, A3A, A73 and A3N board.

Table App2.2 Special Register List (Continue)

Number	Name	Description	Details	Applicable CPU	
D9010	Error step	Step number at which operation error has occurred	• When operation error has occurred during execution of application instruction, the step number, at which the error has occurred, is stored in BIN code. Thereafter, each time operation error occurs, the contents of D9010 are renewed.	△	Unusable with A3H and A3M.
D9011 *1	Error step	Step number at which operation error has occurred	• When operation error has occurred during execution of application instruction, the step number, at which the error has occurred, is stored in BIN code. Since storage into D9011 is made when M9011 changes from off to on, the contents of D9010 cannot be renewed unless M9011 is cleared by user program.	○	Usable with all types of CPUs.
D9014	I/O control mode	I/O control mode number	• The I/O control mode set is returned in any of the following numbers: 0. Both input and output in direct mode 1. Input in refresh mode, output in direct mode 3. Both input and output in refresh mode	△	Unusable with An, A3H and A3M.
D9015	CPU operating states	Operating states of CPU	• The operation states of CPU as shown below are stored in D9015. 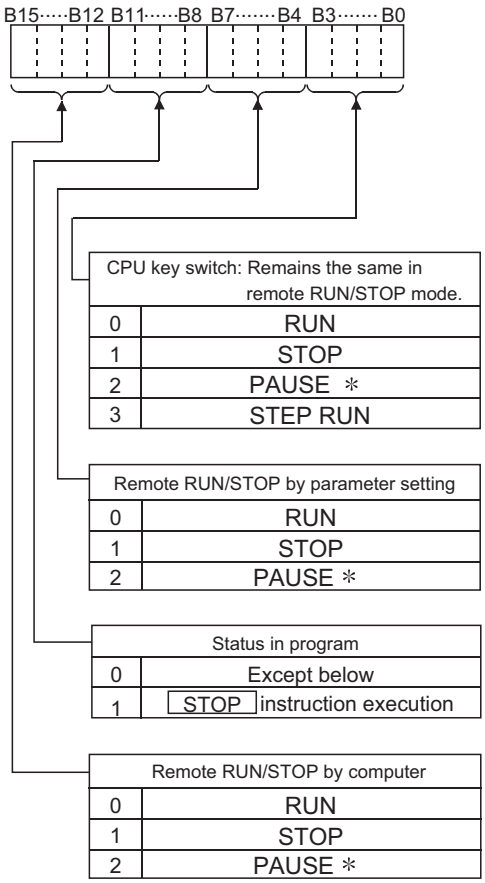 * When the CPU is in RUN mode and M9040 is off, the CPU remains in RUN mode if changed to PAUSE mode.	○	Usable with all types of CPUs.

Table App2.2 Special Register List (Continue)

Number	Name	Description	Details	Applicable CPU	
D9016	ROM/RAM setting	0: ROM 1: RAM 2: E^2PROM	• Indicates the setting of memory select chip. One value of 0 to 2 is stored in BIN code.	—	Usable with A1 and A1N.
	Program number	0: Main program (ROM) 1: Main program (RAM) 2: Subprogram (RAM)	• Indicates which sequence program is run presently. One value of 0 to 2 is stored in BIN code. ("2" is not stored when AnS, AnSH, A1FX, A0J2H, A2C, A2, A2N, A2A, A2AS and A2U is used.)	△	Unusable with A1 and A1N
		0: Main program (ROM) 1: Main program (RAM) 2: Subprogram 1 (RAM) 3: Subprogram 2 (RAM) 4: Subprogram 3 (RAM) 5: Subprogram 1 (ROM) 6: Subprogram 2 (ROM) 7: Subprogram 3 (ROM) 8: Main program (E^2PROM) 9: Subprogram 1 (E^2PROM) A: Subprogram 2 (E^2PROM) B: Subprogram 3 (E^2PROM)	• Indicates which sequence program is run presently. One value of 0 to B is stored in BIN code.	—	Dedicated to AnU.
D9017	Scan time	Minimum scan time (per 10 ms)	• If scan time is smaller than the content of D9017, the value is newly stored at each END. Namely, the minimum value of scan time is stored into D9017 in BIN code.	○	Usable with all types of CPUs.
D9018	Scan time	Scan time (per 10 ms)	• Scan time is stored in BIN code at each END and always rewritten.	○	Usable with all types of CPUs.
D9019	Scan time	Maximum scan time (per 10 ms)	• If scan time is larger than the content of D9019, the value is newly stored at each END. Namely, the maximum value of scan time is stored into D9019 in BIN code.	○	Usable with all types of CPUs.
D9020 *2	Constant scan	Constant scan time (Set by user in 10 ms increments)	• Sets the interval between consecutive user program starts in multiples of 10 ms. 0: No setting 1 to 200: Set. Program is executed at intervals of (set value) × 10 ms.	△	Unusable with An.
D9021	Scan time	Scan time (1 ms unit)	• Scan time is stored and updated in BIN code after every END.	—	Usable with AnA, A2AS, AnU, AnA board and QCPU-A (A Mode).
D9022	1 second counter	Counts 1 every second.	• When the PC CPU starts running, it starts counting 1 every second. • It starts counting up from 0 to 32767, then down to -32768 and then again up to 0. Counting repeats this routine.	—	

Table App2.2 Special Register List (Continue)

Number	Name	Description	Details	Applicable CPU	
*2 D9025	Clock data	Clock data (Year, month)	• Stores the year (2 lower digits) and month in BCD. 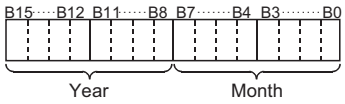 Example: 1987,July H8707	△	Unusable with An, A3H, A3M, A3V, A2C and A0J2H.
*2 D9026	Clock data	Clock data (Day, hour)	• Stores the day and hour in BCD. 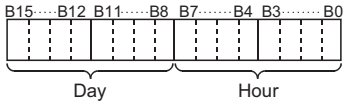 Example: 31th,10 o'clock H3110	△	
*2 D9027	Clock data	Clock data (Minute, second)	• Stores the Minute and second in BCD. 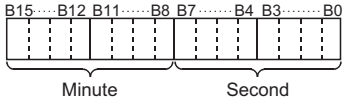 Example: 35 minutes, 48 seconds H3548	△	
*2 D9028	Clock data	Clock data (, day of the week)	• Stores the day of the week in BCD. 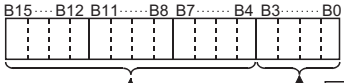 Example: Friday H0005 0 must be set. Day of the week 0 Sunday 1 Monday 2 Tuesday 3 Wednesday 4 Thursday 5 Friday 6 Saturday	△	Unusable with An, A3H, A3M, A3V, A2C and A0J2H.

Table App2.2 Special Register List (Continue)

Number	Name	Description	Details	Applicable CPU	
D9021 D9022 D9023 D9024 D9025 D9026 D9027 D9028 D9029 D9030 D9031 D9032 D9033 D9034	Remote terminal parameter setting	1 to 61	• Sets the head station number of remote terminal modules connected to A2C and A52G. Setting is not necessarily in the order of station numbers. A2CCPUC24:1 to 57 Other CPUs:1 to 61 • Data configuration D9021 Remote terminal module No.1 area D9022 Remote terminal module No.2 area D9033 Remote terminal module No.13 area D9034 Remote terminal module No.14 area	—	Usable with A2C and A52G.
D9035	Attribute of remote terminal module	0: MINI standard protocol 1: No protocol	• Sets attribute of each remote terminal module connected to A2C and A52G with 0 or 1 at each bit. 0: Conforms to the MINI standard protocol or remote terminal unit. 1: No-protocol mode of AJ35PTF-R2 • Data configuration D9035 b15 b14 b13 b12 b11 b10 b9 b8 b7 b6 b5 b4 b3 b2 b1 b0 0/1 0/1 0/1 0/1 0/1 0/1 0/1 0/1 0/1 0/1 0/1 0/1 0/1 0/1 Remote terminal No.1 Remote terminal No.2 Remote terminal No.3 Remote terminal No.13 Remote terminal No.14		
D9035	Extension file register	Use block No.	• Stores the block No. of the extension file register being used in BCD code.	—	Usable with AnA, A2AS, AnU and QCPU-A (A Mode).
D9036	Total number of stations	1 to 64	• Sets the total number of stations (1 to 64) of I/O modules and remote terminal modules which are connected to an A2C or A52G.	—	Usable with A2C and A52G.

Table App2.2 Special Register List (Continue)

Number	Name	Description	Details	Applicable CPU	
D9036 D9037	For designation extension file register device numbers	The devise number used for getting direct access to each device for extension file register	• Designate the device number for the extension file register for direct read and write in 2 words at D9036 and D9037 in BIN data. Use consecutive numbers beginning with R0 of block No. 1 to designate device numbers. 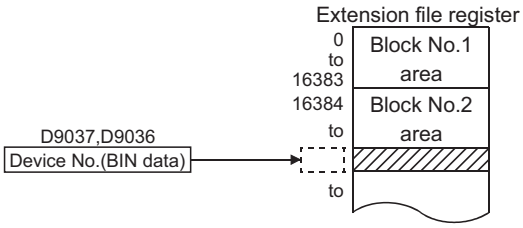	—	Usable with AnA, A2AS, AnU and QCPU-A (A Mode).
D9038 D9039	LED indication priority	Priority 1 to 4 Priority 5 to 7	• Sets priority of ERROR LEDs which illuminate (or flicker) to indicate errors with error code numbers. • Configuration of the priority setting areas is as shown below. 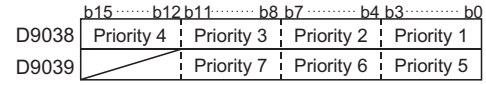 • For details, refer to the applicable CPUs User's Manual and the ACPU (Fundamentals) Programming manual.	—	Usable with A2C, AnS, AnSH, A1FX, A0J2H, A52G AnA, A2AS, AnU and QCPU-A (A Mode).
D9044	Sampling trace	Step or time during sampling trace	• The value stored in D9044 is used as the condition of the sampling trace when M9044 is turned on or off with the peripheral device to start sampling trace STRA or STRAR . At scanning ... 0 At time..... Time (10 ms unit) Stores the value in BIN code for D9044.	△	Usable with A1 and A1N
D9049	SFC program execution work area	Expansion file register block number to be used as the work area for the execution of a SFC program.	• Stores the block number of the expansion file register which is used as the work area for the execution of a SFC program in a binary value. • Stores "0" if an empty area of 16K bytes or smaller, which cannot be expansion file register No. 1, is used or if M9100 is OFF.	—	Usable with AnN*, AnA*, AnU, A2AS, QCPU-A (A Mode), A2C, A0J2H, AnS, AnSH, A1FX and A52G.
D9050	SFC program error code	Code number of error occurred in the SFC program	• Stores code numbers of errors occurred in the SFC program in BIN code. 0: No error 80: SFC program parameter error 81: SFC code error 82: Number of steps of simultaneous execution exceeded 83: Block start error 84: SFC program operation error		
D9051	Error block	Block number in which an error occurred.	• Stores the block number in which an error occurred in the SFC program in BIN code. In the case of error 83 the starting block number is stored.	—	

*: Usable with AnN and AnA which are compatible with SFC.
For the AnN and AnA which are compatible with SFC, refer to the MELSAP-II Programming Manual.

Table App2.2 Special Register List (Continue)

<table>
<tr><th>Number</th><th>Name</th><th>Description</th><th>Details</th><th colspan="2">Applicable CPU</th></tr>
<tr><td>D9052</td><td>Error step</td><td>Step number in which an error occurred.</td><td>• Stores the step number in which error 84 occurred in the SFC program in BIN code.
Stores "0" when errors 80, 81 and 82 occurred.
Stored the block starting step number when error 83 occurred.</td><td>—</td><td rowspan="3">Usable with AnN*, AnA*, AnU, A2S, QCPU-A (A Mode), A2C, A0J2H, AnS, AnSH, A1FX and A52G.</td></tr>
<tr><td>D9053</td><td>Error transfer</td><td>Transfer condition number in which an error occurred.</td><td>• Stores the transfer condition number in which error 84 occurred in the SFC program in BIN code.
Stored "0" when errors 80, 81, 82 and 83 occurred.</td><td>—</td></tr>
<tr><td>D9054</td><td>Error sequence step</td><td>Sequence step number in which an error occurred.</td><td>• Stores the sequence step number of transfer condition and operation output in which error 84 occurred in the SFC program in BIN code.</td><td>—</td></tr>
<tr><td>D9055</td><td>Status latch execution step number</td><td>Status latch execution step number</td><td>• Stores the step number when status latch is executed.
• Stores the step number in a binary value if status latch is executed in a main sequence program.
• Stores the block number and the step number if status latch is executed in a SFC program.
<table><tr><td>Block No. (BIN)</td><td>Step No. (BIN)</td></tr><tr><td>← Higher 8 bits →</td><td>← Lower 8 bits →</td></tr></table></td><td>—</td><td>Usable with AnA, A2AS, AnA bpard, AnU and QCPU-A (A Mode).</td></tr>
<tr><td>D9060</td><td>Software version</td><td>Software version of internal system</td><td>Stores the software version of the CPU module's internal system in ASCII codes.
Example: Stores "41H" for version A.
Note)The software version of the internal system may be different from the version marked on the housing.
*5: This function is available with the CPU of the following S/W versions or later.
<table><tr><th>CPU Type Name</th><th>Software Version</th></tr><tr><td>A2ACPU (P21/R21), A2ACPU-S1 (P21/R21)</td><td>S/W version W (Manufactured in July, 1998)</td></tr><tr><td>A3ACPU (P21/R21)</td><td>S/W version X (Manufactured in July, 1998)</td></tr><tr><td>A2UCPU (S1), A3UCPU, A4UCPU</td><td>S/W version H (Manufactured in July, 1998)</td></tr><tr><td>A1SJHCPU, A1SHCPU, A2SHCPU</td><td>S/W version H (Manufactured in May, 1998)</td></tr><tr><td>A2USCPU (S1)</td><td>S/W version Y (Manufactured in July, 1998)</td></tr><tr><td>A2USHCPU-S1</td><td>S/W version E (Manufactured in July, 1998)</td></tr></table></td><td>△</td><td>Can be used only with AnU, A2US, or AnSH. *5</td></tr>
<tr><td>D9061</td><td>Communication error code</td><td>0: Normal
1: Initial data error
2: Line error</td><td>• Stores error code when M9061 is turned on (communication with I/O modules or remote terminal modules fails).
• 1 ..... Total number of stations of I/O modules or remote terminal modules or number of retries is not normal. Initial program contains an error.
• 2 ..... Cable breakage or power supply of I/O modules or remote terminal modules is turned off.</td><td>—</td><td>Usable with A2C and A52G.</td></tr>
</table>

*: Usable with AnN and AnA which are compatible with SFC.
For the AnN and AnA which are compatible with SFC, refer to the MELSAP-II Programming Manual.

Table App2.2 Special Register List (Continue)

Number	Name	Description	Details	Applicable CPU	
D9068	Abnormal base module	Stores the bit pattern of the abnormal base module	Stores the bit pattern of the base module in abnormal condition. When basic base module is abnormal: Bit 0 turns ON. When 1st expansion base module is abnormal: Bit 1 turns ON. When 2nd expansion base module is abnormal: Bit 2 turns ON. : : When 7th expansion base module is abnormal: Bit 7 turns ON.	—	Dedicated to QCPU-A (A Mode)
D9072	PC communication check	Data check by AJ71C24	• In the loopback test mode of individual AJ71C24, the AJ71C24 automatically executes data write/read and communication check.	○	Usable with all types of CPUs.
D9073	Clock data	Clock data (year, month)	• Two digits showing the year (XX of 19XX) and month are stored to D9073 in BCD codes, as shown below. B15 B12 B11 B8 B7 B4 B3 B0 Year Month Example: 1987,July H8707	—	Dedicated to A2CCPUC24 (-PRF)
D9074	Clock data	Clock data (day, time)	• Two digits showing the day and time are stored to D9074 in BCD codes, as shown below. B15 B12 B11 B8 B7 B4 B3 B0 Day Time Example: 31th,10 o'clock H3110		
D9075	Clock data	Clock data (minute, second)	• Two digits showing the minute and second are stored to D9075 in BCD codes, as shown below. B15 B12 B11 B8 B7 B4 B3 B0 Minute Second Example: 35 minutes, 48 seconds H3548		Dedicated to A2CCPUC24 (-PRF)
D9075	Result of writing to built-in ROM	Stores the status of writing to the built-in ROM	Stores the status of writing to the built-in ROM. 0: Writing enabled F1H: During RAM operation F2H: Writing to built-in ROM disabled F3H: Failed to erase F4H: Failed to write FEH: Checking erasing FFH: During writing	—	Dedicated to QCPU-A (A Mode)
D9076	Clock data	Clock data (day of the week)	• Two day of the week is stored to D9076 in BCD codes, as shown below. B15 B12 B11 B8 B7 B4 B3 B0 These digits are always set to 0. Day of the week: 0 Sunday; 1 Monday; 2 Tuesday; 3 Wednesday; 4 Thursday; 5 Friday; 6 Saturday	—	Dedicated to A2CCPUC24 (-PRF)
D9076	Status of writing to built-in ROM	Stores the status of writing (enabled/disabled) to the built-in ROM	Stores the status of writing (enabled/disabled) to the built-in ROM. Statuses of DIP switch 3 and M9073 0: SW3 is OFF, M9073 is OFF/ON 1: SW3 is ON, M9073 is OFF 2: SW3 is ON, M9073 is ON	—	Dedicated to QCPU-A (A Mode)

Table App2.2 Special Register List (Continue)

<table>
<tr><th>Number</th><th>Name</th><th>Description</th><th>Details</th><th colspan="2">Applicable CPU</th></tr>
<tr><td>D9077</td><td>Sequence accumulation time measurement</td><td>Accumulation time setting</td><td>• Stores the accumulation time used by M9077.
Setting range: 1 to 255ms (Default: 5ms)
* When the value other than 1 to 255 ms is designated, the value in D9077 is reset to 0.</td><td>—</td><td>Dedicated to QCPU-A (A Mode)</td></tr>
<tr><td>D9080</td><td>Number of executable CC-Link dedicated instructions</td><td>Stores the number of remaining CC-Link dedicated instructions being executable</td><td>Stores the number of remaining instructions (RIRD / RIWT / RISEND / RIRCV) being executable simultaneously at one scan.
(With QCUP-A or AnUCPU)
Number of remaining instructions being executable = 10 – Number of instructions executed simultaneously
(With AnSHCPU)
Number of remaining instructions being executable = 64 – Number of instructions executed simultaneously
*6: This function is available with the CPU of the following S/W versions or later.
<table>
<tr><th>CPU Type Name</th><th>Software Version</th></tr>
<tr><td>Q02CPU-A, Q02HCPU-A, Q06HCPU-A</td><td rowspan="2">Available with all versions</td></tr>
<tr><td>A1SJHCPU, A1SHCPU, A2SHCPU</td></tr>
<tr><td>A2UCPU (S1), A3UCPU, A4UCPU</td><td>S/W version Q (Manufactured in July, 1999)</td></tr>
<tr><td>A2USCPU (S1)</td><td>S/W version E (Manufactured in July, 1999)</td></tr>
<tr><td>A2USHCPU-S1</td><td>S/W version L (Manufactured in July, 1999)</td></tr>
</table></td><td>△</td><td>Can be used only with AnU, A2US, QCPU-A (A Mode) or AnSH *6</td></tr>
<tr><td>D9081</td><td>Number of vacant registration areas for communication requests</td><td>0 to 32</td><td>• Stores the number of vacant registration areas for communication requests executed to remote terminal modules connected to MINI (S3) link module, A2C and A52G.</td><td>—</td><td>Usable with AnA, A2AS, QCPU-A (A Mode), AnU, A2C and A52G.</td></tr>
<tr><td>D9082</td><td>Final connected station number</td><td>Final connected station number</td><td>• Stores the final station number of remote I/O modules and remote terminal modules connected to A2C and A52G.</td><td>—</td><td>Usable with A2C and A52G.</td></tr>
<tr><td>D9085</td><td>Time check time</td><td>1 s to 65535 s</td><td>• Sets the time check time of the data link instructions (ZNRD , ZNWR) for the MELSECNET/10.
• Setting range: 1 s to 65535 s (1 to 65535)
• Setting unit: 1 s
• Default value: 10 s (If 0 has been set, default 10 s is applied)</td><td>—</td><td>Usable with AnU and A2AS, QCPU-A (A Mode)</td></tr>
<tr><td>D9090</td><td>Microcomputer subroutine input data area head device number</td><td>Depends on the micro-computer program package to be used.</td><td>• For details, refer to the manual of each microcomputer program package.</td><td>△</td><td>Unusable with AnA, A2AS, QCPU-A (A Mode) and AnU.</td></tr>
<tr><td rowspan="2">D9091</td><td>Instruction error</td><td>Instruction error detail number</td><td>• Stores the detail code of cause of an instruction error.</td><td>—</td><td>Usable with AnA, A2AS, QCPU-A (A Mode),AnA board and AnU.</td></tr>
<tr><td>Microcomputer subroutine call error code</td><td>Depends on the micro-computer program package to be used.</td><td>• For details, refer to the manual of each microcomputer program package.</td><td>△</td><td>Unusable with AnA, A2AS, QCPU-A (A Mode),AnA board and AnU.</td></tr>
</table>

Table App2.2 Special Register List (Continue)

Number	Name	Description	Details	Applicable CPU	
D9091	SFC program detail error number	Detail error number of the error which occurred in a SFC program	• Stores the detail error number of the error occurred in a SFC program in a binary value.	—	Usable with AnN*, AnA*, AnU, A2US(H), A2C, AOJ2H, QCPU-A (A Mode), AnS, AnSH, A1FX.
*2 *3 D9094	Changed I/O module head address	Changed I/O module head address	• Stores upper 2 digits of the head I/O address of I/O modules to be loaded or unloaded during online mode in BIN code. Example) Input module X2F0 → H2F	—	Unusable with AnN, A3V, AnA, A73, AnU.
D9095	Operation state of the A3VTS system and A3VCPU	Stores operation with 4 hexadecimal digits.	• Monitors operation state of the A3VTS system and the A3VCPU. D9095: B15 B12 B8 B4 B0 System operation state: CPU A, CPU B, CPU C System operation state: A: RUN B: STEP-RUN C: PAUSE D: STOP E: ERROR CPU A, CPU B, CPU C: 0: RUN 1: STAND-BY 2: STEP-RUN 3: PAUSE 4: STOP 5: WAIT 6: ERROR 7: NO RIGHT OF OPERATION	—	Dedicated to A3V.
	Dip switch information	Dip switch information	• Dip switch information of CPU module is stored as follows. 0:ON 1:OFF D9095: B15 to B4 B3 B2 B1 B0 0 B0 → SW1 B1 → SW2 B2 → SW3 B3 → SW4 B4 → SW5	—	Usable wtih QCPU-A (A mode) only.
D9096	A3VCPU A Self-check error	Self-check error code	• Error code of self-check error on CPU A is stored in BIN code. • Cleared when D9008 of CPU A is cleared.	—	Dedicated to A3V.
D9097	A3VCPU B Self-check error	Self-check error code	• Error code of self-check error on CPU B is stored in BIN code. • Cleared when D9008 of CPU B is cleared.	—	Dedicated to A3V.
D9098	A3VCPU C Self-check error	Self-check error code	• Error code of self-check error on CPU C is stored in BIN code. • Cleared when D9008 of CPU C is cleared.	—	Dedicated to A3V.
D9099	A3VTU Self-check error	Self-check error code	• Error code of self-check error on A3VTU is stored in BIN code.	—	Dedicated to A3V.

*: Usable with AnN and AnA which are compatible with SFC.
For the AnN and AnA which are compatible with SFC, refer to the MELSAP-II Programming Manual.

Table App2.2 Special Register List (Continue)

Number	Name	Description	Details	Applicable CPU	
*1 D9100 *1 D9101 *1 D9102 *1 D9103 *1 D9104 *1 D9105 *1 D9106 *1 D9107	Fuse blown module	Bit pattern in units of 16 points of fuse blow modules	• Output module numbers (in units of 16 points), of which fuses have blown, are entered in bit pattern. (Preset output unit numbers when parameter setting has been performed.) 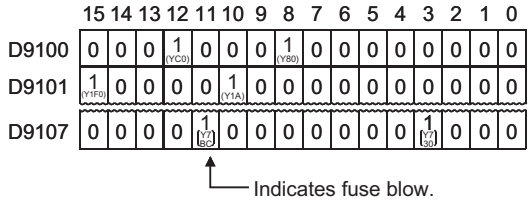 • Fuse blow check is executed also to the output module of remote I/O station. (If normal status is restored, clear is not performed. Therefore, it is required to perform clear by user program.) (For the AnU, A2US(H) and QCPU-A (A mode)) • Data clear of D9100 to D9107 is executed by turning off M9000 (fuse blown). (For the CPU other than the AnU, A2US(H) and QCPU-A (A mode)) • Data clear of D9100 to D9107 is executed by turning off D9100 to D9107 (fuse blown).	○	Usable with all types of CPUs (Only remote I/O station information is valid for A2C.)
*1 D9100	Fuse blow module	Fuse blow module bit pattern	• Stores the output module number of the fuses have blown in the bit pattern. 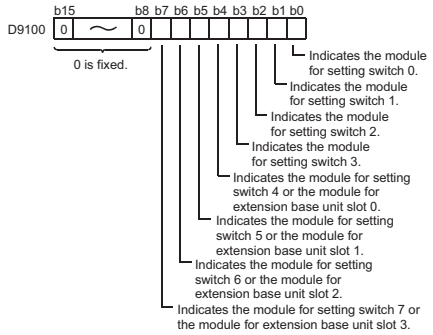 	—	Dedicated to A0J2H.
*2 D9108 *2 D9109 *2 D9110 *2 D9111 *2 D9112 *2 D9113 *2 D9114	Step transfer monitoring timer setting	Timer setting value and the F number at time out	• Sets value for the step transfer monitoring timer and the number of F which turns on when the monitoring timer timed out. 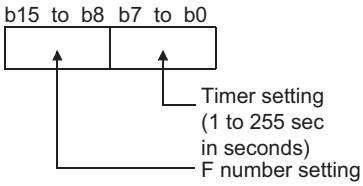 (By turning on any of M9108 to M9114, the monitoring timer starts. If the transfer condition following a step which corresponds to the timer is not established within set time, set annunciator (F) is tuned on.	—	Usable with AnN , AnA, AnU, A2AS, AnA board, QCPU-A (A Mode), A2C, A0J2H, AnS, AnSH, A1FX and A52G.

*: Usable with AnN and AnA which are compatible with SFC.
For the AnN and AnA which are compatible with SFC, refer to the MELSAP-II Programming Manual.

Table App2.2 Special Register List (Continue)

Number	Name	Description	Details	Applicable CPU	
*1 D9116 *1 D9117 *1 D9118 *1 D9119 *1 D9120 *1 D9121 *1 D9122 *1 D9123	I/O module verify error	Bit pattern in units of 16 points of verify error units	• When I/O modules, of which data are different from those entered at power-on, have been detected, the I/O unit numbers (in units of 16 points) are entered in bit pattern. (Preset I/O unit numbers when parameter setting has been performed.) 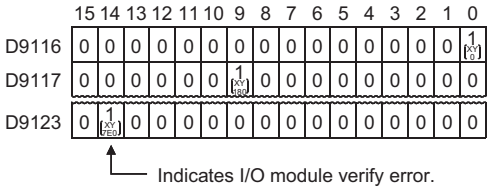 • I/O module verify check is executed also to remote I/O station modules. (If normal status is restored, clear is not performed. Therefore, it is required to perform clear by user program.)	○	Usable with all types of CPUs (Only remote I/O station information is valid for A2C.)
*1 D9116	I/O module verification error	Bit pattern of verification error module	• When an I/O module different from the I/O module data registered during power-on is detected, this register indicates the bit pattern of the I/O module number. 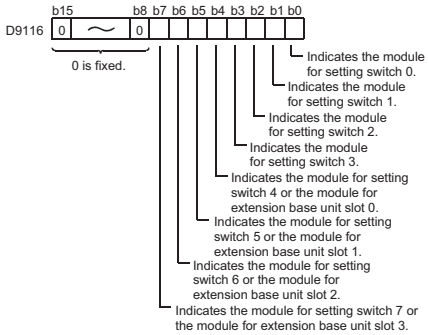 	—	Dedicated to A0J2H.
D9124	Annunciator detection quantity	Annunciator detection quantity	• When one of F0 to 255 (F0 to 2047 for AnA and AnU) is turned on by SET F 1 is added to the contents of D9124. When RST F or LEDR instruction is executed, 1 is subtracted from the contents of D9124. (If the INDICATOR RESET switch is provided to the CPU, pressing the switch can execute the same processing.) • Quantity, which has been turned on by SET F is stored into D9124 in BIN code. The quantity turned on with SET F is stored up to "8."	○	Usable with all types of CPUs.

Table App2.2 Special Register List (Continue)

Number	Name	Description	Details	Applicable CPU	
D9125 D9126 D9127 D9128 D9129 D9130 D9131 D9132	Annunciator detection number	Annunciator detection number	• When one of F0 to 255 (F0 to 2047 for AnA and AnU) is turned on by SET F, F number, which has turned on, is entered into D9125 to D9132 in due order in BIN code. F number, which has been turned off by RST F, is erased from D9125 to D9132, and the contents of data registers succeeding the data register, where the erased F number was stored, are shifted to the preceding data registers. By executing LEDR instruction, the contents of D9125 to D9132 are shifted upward by one. (With a CPU equipped with an INDICATOR RESET switch, the same process occurs when the switch is pressed. When there are 8 annunciator detections, the 9th one is not stored into D9125 to 9132 even if detected. SET F50 → SET F25 → SET F99 → RST F25 → SET F15 → SET F70 → SET F65 → SET F38 → SET F110 → SET F151 → SET F210 → LEDR D9009: 0 50 50 50 50 50 50 50 50 50 50 50 99 D9124: 0 1 2 3 2 3 4 5 6 7 8 8 8 D9125: 0 50 50 50 50 50 50 50 50 50 50 50 99 D9126: 0 0 25 25 99 99 99 99 99 99 99 99 15 D9127: 0 0 0 99 0 15 15 15 15 15 15 15 70 D9128: 0 0 0 0 0 0 70 70 70 70 70 70 65 D9129: 0 0 0 0 0 0 0 65 65 65 65 65 38 D9130: 0 0 0 0 0 0 0 0 38 38 38 38 110 D9131: 0 0 0 0 0 0 0 0 0 110 110 110 151 D9132: 0 0 0 0 0 0 0 0 0 0 151 151 210	○	Usable with all types of CPUs
D9133 D9134 D9135 D9136 D9137 D9138 D9139 D9140	Remote terminal card information	00: No I/O module or remote terminal module or initial communication impossible 01: Input module or remote terminal module 10: Output module	• Stores information of I/O modules and remote terminal modules connected to the A2C and A52G corresponding to station number. • Information of I/O modules and remote terminal modules is for input, output and remote terminal module identification and expressed as 2-bit data. 00: No I/O module or remote terminal module or initial communication is impossible. 01: Input module or remote terminal module 10: Output module • Data configuration b15 b14 b13 b12 b11 b10 b9 b8 b7 b6 b5 b4 b3 b2 b1 b0 D9133: Station 8, Station 7, Station 6, Station 5, Station 4, Station 3, Station 2, Station 1 Station 16, Station 15, Station 14, Station 13, Station 12, Station 11, Station 10, Station 9 Station [illegible], Station [illegible], Station [illegible], Station [illegible], Station 20, Station 19, Station 18, Station [illegible] Station 56, Station 55, Station 54, Station 53, Station 52, Station 51, Station 50, Station 49 D9140: Station 64, Station 63, Station 62, Station 61, Station 60, Station 59, Station 58, Station 57		Usable with A2C and A52G

Table App2.2 Special Register List (Continue)

Number	Name	Description	Details	Applicable CPU	
D9141 D9142 D9143 D9144 D9145 D9146 D9147 D9148 D9149 D9150 D9151 D9152 D9153 D9154 D9155 D9156 D9157 D9158 D9159 D9160 D9161 D9162 D9163 D9164 D9165 D9166 D9167 D9168 D9169 D9170 D9171 D9172	Number of times of retry execution	Number of retries	• Stores the number of retries executed to I/O modules or remote terminal modules which caused communication error. (Retry processing is executed the number of times set at D9174.) • Data becomes 0 when communication is restored to normal. • Station number setting of I/O modules and remote terminal modules is as shown below. b15 to b8 / b7 to b0 D9141: Station 2 / Station 1 D9142: Station 4 / Station 3 D9143: Station 6 / Station 5 ⋮ D9171: Station 62 / Station 61 D9172: Station 64 / Station 63 • Retry counter uses 8 bits for one station. b(n+7) b(n+6) b(n+5) b(n+4) b(n+3) b(n+2) b(n+1) b(n+0) 0/1 [Number of retries] 0: Normal 1: Station error * "n" is determined by station number of I/O module or remote terminal module. Odd number stations: b0 to b7 (n = 0) Even number stations: b8 to b15 (n = 8)	—	Usable with A2C and A52G.

Table App2.2 Special Register List (Continue)

Number	Name	Description	Details	Applicable CPU	
D9173	Mode setting	0: Automatic online return enabled 1: Automatic online return disabled 2: Transmission stop at online error 3: Line check	Mode setting 0 Automatic online return enabled: • When an I/O module or a remote terminal module caused communication error, the station is placed offline. • Communication with normal stations is continued. • The station recovering from a communication error automatically resumes communication. 1 Automatic online return disabled: • When an I/O module or a remote terminal module caused communication error, the station is placed offline. • Communication with normal stations is continued. • Though a faulty station returned to normal, communication is not restored unless the station module is restarted. 2 Transmission stop at online error: • When an I/O module or a remote terminal module caused communication error, communication with all stations is stopped. • Though a faulty station returned to normal, communication is not restored unless the station module is restarted. 3 Line check: • Checks hardware and connecting cables of I/O modules and remote terminal modules.	—	Usable with A2C and A52G.
D9174	Setting of the number of retries	Number of retries	• Sets the number of retries executed to I/O modules and remote terminal modules which caused communication error. • Set for 5 times at power on. • Set range: 0 to 32 • If communication with an I/O module or a remote terminal module is not restored to normal after set number of retries, such module is regarded as a faulty station.	—	Usable with A2C and A52G.
D9175	Line error retry counter	Number of retries	• Stores the number of retries executed at line error (time out). • Data becomes 0 when line is restored to normal and communication with I/O modules and remote terminal modules is resumed.	—	Usable with A2C and A52G.
D9180 D9181 D9182 D9183 D9184 D9185 D9186 D9187 D9188 D9189 D9190 D9191 D9192 D9193	Remote terminal module error number	Remote terminal number	• Stores error code of a faulty remote terminal module when M9060 is turned on. • The error code storage areas for each remote terminal module are as shown below. D9180 Remote terminal module No.1 D9181 Remote terminal module No.2 D9182 Remote terminal module No.3 ⋮ D9192 Remote terminal module No.13 D9193 Remote terminal module No.14 Remote terminal module numbers from 1 to 14 are set with D9020 to D9034. • Error code is cleared in the following cases. • When the RUN key switch is moved from STOP to RUN. (D9180 to D9183 are all cleared.) • When Yn4 of each remote terminal is set from OFF to ON.	—	Usable with A2C and A52G.

Table App2.2 Special Register List (Continue)

Number	Name	Description	Details		
D9180	Limit switch output state torage areas for axes 1 and 2	Bit pattern of limit switch function output state	• Stores output state of limit switch function. 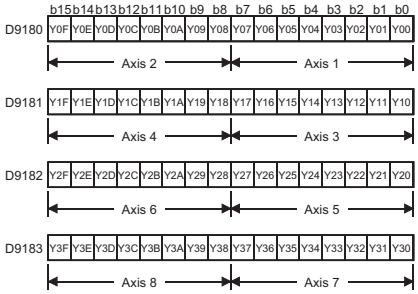 "1" is stored in the bit which corresponds to output (Y) which is turned on. "0" is stored when output state is turned off.	—	Dedicated to A73.
D9181	Limit switch output state storage areas for axes 3 and 4			—	Dedicated to A73.
D9182	Limit switch output state storage areas for axes 5 and 6			—	Dedicated to A73.
D9183	Limit switch output state storage areas for axes 7 and 8			—	Dedicated to A73.
D9184	Cause of PCPU error	PCPU error code	• Stores error codes occurred at the PCPU in BIN code. 0 : Normal 1 : A73CPU hardware error 2 : PCPU error 10: A70AF error 11: A70AF error 12: A70MDF error 13: AY42 error	—	Dedicated to A73.
D9185	Servo amplifier connection data	Bit pattern of servo amplifier connection state	• Servo amplifier connection state is checked and the result is stored in the bit which corresponds to each axis number. Connection state is continuously checked. Axes which changed from disconnected state to connected state are regarded as connected. But, axes which changed from connected state to disconnected state are still regarded as connected. 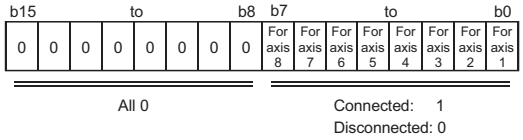 	—	Dedicated to A73.

Table App2.2 Special Register List (Continue)

Number	Name	Description	Details		
D9187	Manual pulse generator axis setting error	Manual pulse generator axis setting error code	• Stores error code when the manual pulse generator axis setting error flag (M9077) is turned on in the bit each corresponds to each axis number. b15 to b8 b7 to b0 For axis 8 / For axis 7 / For axis 6 / For axis 5 / For axis 4 / For axis 3 / For axis 2 / For axis 1 / 0 / 0 / 0 / 0 / 0 / For P3 / For P2 / For P1 "1" is stored in the bit which corresponds to the axis number which caused 1 pulse input magnification setting error. 0: Normal 1: Input magnification is out of the range from 1 to 100. (Not used) "1" is stored in the bit which corresponds to the manual pulse generator number which caused manual pulse generator axis setting error. 0: Normal 1: Axis setting is out of the range from 1 to 8.	—	Dedicated to A73.
D9188	Starting axis number at test mode request error	Starting axis number	• Stores axis number in the bit which corresponds to the axis which was running when a test mode request was given and test mode request error occurred. b15 to b8 b7 to b0 0 / 0 / 0 / 0 / 0 / 0 / 0 / 0 / For axis 8 / For axis 7 / For axis 6 / For axis 5 / For axis 4 / For axis 3 / For axis 2 / For axis 1 (Not used) "1" is stored when running. "0" is stored when not running.	—	Dedicated to A73.
D9189	Error program number	Error program number	• Stores error servo program number (0 to 4095) when the servo program setting error flag (M9079) is turned on.	—	Dedicated to A73.
D9190	Data setting error	Data setting error number	• Stores error code which corresponds to the error setting item when the servo program setting error flag (M9079) is turned on.	—	Dedicated to A73.
D9191	Servo amplifier type	Bit pattern of the axis connected to a general-purpose servo amplifier	• Stores type of connected servo amplifier in the bit which corresponds to each axis number. 0: MR-SB/MR-SD/MR-SB-K is connected or not connected. 1: General-purpose servo amplifier is connected. b15 to b8 b7 to b0 0 / 0 / 0 / 0 / 0 / 0 / 0 / 0 / For axis 8 / For axis 7 / For axis 6 / For axis 5 / For axis 4 / For axis 3 / For axis 2 / For axis 1 All 0 Type of servo amplifier set at each axis is stored with "0" or "1".	—	Dedicated to A73.

Table App2.2 Special Register List (Continue)

Number	Name	Description	Details		
D9196 D9197 D9198 D9199	Faulty station detection	Bit pattern of the faulty station	• Bit which corresponds to faulty I/O module or remote terminal module is set (1). (Bit which corresponds to a faulty station is set when normal communication cannot be restored after executing the number of retries set at D9174.) • If automatic online return is enabled, bit which corresponds to a faulty station is reset (0) when the station is restored to normal. • Data configuration	—	Usable with A2C and A52G.

Address	b15	b14	b13	b12	b11	b10	b9	b8	b7	b6	b5	b4	b3	b2	b1	b0
D9196	Stasion 16	Stasion 15	Stasion 14	Stasion 13	Stasion 12	Stasion 11	Stasion 10	Stasion 9	Stasion 8	Stasion 7	Stasion 6	Stasion 5	Stasion 4	Stasion 3	Stasion 2	Stasion 1
D9197	Stasion 32	Stasion 31	Stasion 30	Stasion 29	Stasion 28	Stasion 27	Stasion 26	Stasion 25	Stasion 24	Stasion 23	Stasion 22	Stasion 21	Stasion 20	Stasion 19	Stasion 18	Stasion 17
D9198	Stasion 48	Stasion 47	Stasion 46	Stasion 45	Stasion 44	Stasion 43	Stasion 42	Stasion 41	Stasion 40	Stasion 39	Stasion 38	Stasion 37	Stasion 36	Stasion 35	Stasion 34	Stasion 33
D9199	Stasion 64	Stasion 63	Stasion 62	Stasion 61	Stasion 60	Stasion 59	Stasion 58	Stasion 57	Stasion 56	Stasion 55	Stasion 54	Stasion 53	Stasion 52	Stasion 51	Stasion 50	Stasion 49

1: Error
0: Normal

POINTS

(1) Special registers are cleared when the PC is switched off or the RESET switch is set to LATCH CLEAR or RESET. Data remains unchanged when the RUN/STOP key switch is set to STOP.

(2) The above special registers marked *1 above are latched and their data will remain unchanged after normal status is restored. For this reason, use one of the following methods to clear the registers.

(a) Method by user program
Insert the circuit shown at right into the program and turn on the clear execution command contact to clear the contents of register.

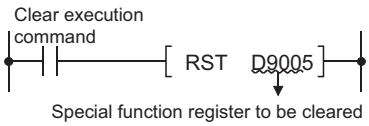

(b) Method by peripheral equipment
Set the register to "0" by changing the present value by the test function of peripheral equipment or set to "0" by forced reset. For the operation procedure, refer to the Instruction Manual for peripheral equipment.

(c) By moving the RESET key switch at the CPU front to the RESET position, the special register is set to "0".

(3) Data is written to special registers marked *2 above in the sequence program.

(4) Data is written to special registers marked *3 above in test mode of the peripheral equipment.

Appendix3 Peripheral Device

(1) The following table shows peripheral devices used in the existing systems and applicability of the system FD.

(a) For A2USHCPU-S1

Model name of the peripheral device	Model name of the software package	Applicability	Applicable range	PLC model name at start-up
A6GPP/A6PHP	SW4GP-GPPA	Usable	Device range of A3ACPU	A3A
	SW3GP-GPPA	Usable	Device range of A3HCPU	A3H
	SW2 type or earlier	Not usable	–	–
A6HGP	SW3-HGPA	Usable	Device range of A3HCPU	A3H
	SW2 type or earlier	Not usable	–	–
A8PUE	–	Usable	Device range of A3ACPU	A2USH (displayed at the start-up)
A7PU A7PUS	–	Usable	Device range of A3HCPU	A2USH (displayed at the startup)
A6WU	Software version "E" or later	Usable	Device range of A3ACPU	–
	Software version "D" or earlier	Not usable	–	–

(b) For A2USCPU(S1)

Model name of the peripheral device	Model name of the software package	Applicability	Applicable range	PLC model name at start-up
A6GPP/A6PHP	SW4GP-GPPA	Usable	Device range of A2ACPU	A2A
	SW3GP-GPPA	Usable	Device range of A3HCPU	A3H
	SW2 type or earlier	Not usable	–	–
A6HGP	SW3-HGPA	Usable	Device range of A3HCPU	A3H
	SW2 type or earlier	Not usable	–	–
A8PUE	–	Usable	Device range of A2ACPU	A2U (displayed at the start-up)
A7PU A7PUS	–	Usable	Device range of A3HCPU	A2U (displayed at the start-up)
A6WU	Software version "E" or later	Usable	Device range of A2ACPU	–
	Software version "D" or earlier	Not usable	–	–

(c) For A2ASCPU-S30

Model name of the peripheral device	Model name of the software package	Applicability	Applicable range	PLC model name at start-up
A6GPP/A6PHP	SW4GP-GPPA	Usable	Device range of A2ACPU	A2A
	SW3GP-GPPA	Usable	Device range of A3HCPU	A3H
	SW2 type or earlier	Not usable	–	–
A6HGP	SW3-HGPA	Usable	Device range of A3HCPU	A3H
	SW2 type or earlier	Not usable	–	–
PC/AT	SW0IX-GPPAE	Usable	Device range of A3ACPU	A2US
	SW□IVD-GPPA	Usable	Device range of A3UCPU	A2US
	MELSEC-MEDOC	Usable	Device range of A3ACPU	A2US
A8PUE	–	Usable	Device range of A2ACPU	A2U (displayed at the start-up)
A7PU A7PUS	–	Usable	Device range of A3HCPU	A2U (displayed at the start-up)
A6WU	Software version "E" or later	Usable	Device range of A2ACPU	–
	Software version "D" or earlier	Not usable	–	–

(d) For A2ASCPU,A2ASCPU-S1

Model name of the peripheral device	Model name of the software package	Applicability	Applicable range	PLC model name at start-up
A6GPP/A6PHP	SW4GP-GPPA	Usable	Device range of A2ACPU	A2A
	SW3GP-GPPA	Usable	Device range of A3HCPU	A3H
	SW2 type or earlier	Not usable	–	–
A6HGP	SW3-HGPA	Usable	Device range of A3HCPU	A3H
	SW2 type or earlier	Not usable	–	–
PC/AT	SW0IX-GPPAE	Usable	Device range of A2ACPU	A2US
	SW□IVD-GPPA	Usable	Device range of A2UCPU	A2US
	MELSEC-MEDOC	Usable	Device range of A2ACPU	A2US
A8PUE	–	Usable	Device range of A2ACPU	A2U (displayed at the start-up)
A7PU A7PUS	–	Usable	Device range of A3HCPU	A2U (displayed at the start-up)
A6WU	Software version "E" or later	Usable	Device range of A2ACPU	–
	Software version "D" or earlier	Not usable	–	–

(2) The compatibility of the conventional products (existing system products) and the new products (AnU-compatible products) is listed in the following table.

(a) For A2USHCPU-S1

No.	Product used to write to the CPU module	Product used to read from the CPU module	Compatibility
1	Conventional product (PLC: A3A start-up)	New Product (PLC: A3A start-up)	• All the data are compatible.
2	New Product (PLC: A3A start-up)	Conventional product (PLC: A3A start-up)	
3	Conventional product (PLC: A3A start-up)	New Product (PLC: A3U start-up)	• Because the PLC model names are different between in writing and in reading, the following conditions are identified. 1) If the verification is performed after reading, mismatch is identified. (The data can be used.) 2) Set values of the sampling trace/status latch (data stored in the CPU module) will not be displayed. 3) When the network parameters are set to the new product, they will not be displayed on the conventional product.
4	New Product (PLC: A3U start-up)	Conventional product (PLC: A3A start-up)	

(b) For A2USCPU(S1)

No.	Product used to write to the CPU module	Product used to read from the CPU module	Compatibility
1	Conventional product (PLC: A2A start-up)	New Product (PLC: A2A start-up)	• All the data are compatible.
2	New Product (PLC: A2A start-up)	Conventional product (PLC: A2A start-up)	
3	Conventional product (PLC: A2A start-up)	New Product (PLC: A2U start-up)	• Because the PLC model names are different between in writing and in reading, the following conditions are identified. 1) If the verification is performed after reading, mismatch is identified. (The data can be used.) 2) Set values of the sampling trace/status latch (data stored in the CPU module) will not be displayed. 3) When the network parameters are set to the new product, they will not be displayed on the conventional product.
4	New Product (PLC: A2U start-up)	Conventional product (PLC: A2A start-up)	

(c) For A2SCPU-S30

No.	Product used to write to the CPU module	Product used to read from the CPU module	Compatibility
1	Conventional product (PLC: A3A start-up)	New Product (PLC: A3A start-up)	• All the data are compatible.
2	New Product (PLC: A3A start-up)	Conventional product (PLC: A3A start-up)	
3	Conventional product (PLC: A3A start-up)	New Product (PLC: A3U start-up)	• Because the PLC model names are different between in writing and in reading, the following conditions are identified. 1) If the verification is performed after reading, mismatch is identified. (The data can be used.) 2) Set values of the sampling trace/status latch (data stored in the CPU module) will not be displayed. 3) When the network parameters are set to the new product, they will not be displayed on the conventional product.
4	New Product (PLC: A3U start-up)	Conventional product (PLC: A3A start-up)	

(d) For A2ASCPU,A2ASCPU-S1

No.	Product used to write to the CPU module	Product used to read from the CPU module	Compatibility
1	Conventional product (PLC: A2A start-up)	New Product (PLC: A2A start-up)	• All the data are compatible.
2	New Product (PLC: A2A start-up)	Conventional product (PLC: A2A start-up)	
3	Conventional product (PLC: A2A start-up)	New Product (PLC: A2U start-up)	• Because the PLC model names are different between in writing and in reading, the following conditions are identified. 1) If the verification is performed after reading, mismatch is identified. (The data can be used.) 2) Set values of the sampling trace/status latch (data stored in the CPU module) will not be displayed. 3) When the network parameters are set to the new product, they will not be displayed on the conventional product.
4	New Product (PLC: A2U start-up)	Conventional product (PLC: A2A start-up)	

POINT

Do not read the A2USHCPU-S1/A2USCPU(S1)/A2ASCPU(S1/S30), to which the MELSECNET/10 network parameters were set by a new product, from a conventional product and perform the following operation since a "LINK PARA. ERROR" (CPU module error) is detected.

(a) Modifying and writing in the main sequence program area (memory capacity).

(b) Writing the read parameters to another A2USHCPU-S1/A2USCPU(S1)/A2ASCPU(S1/S30) in the network system.

Appendix4 Precautions for Utilizing the Existing Sequence Programs for A2USHCPU-S1, A2USCPU(S1), or A2ASCPU(S1/S30)

This section explains the precautions for utilizing the sequence programs created for the A1SHCPU, A2SHCPU to the A2USHCPU-S1, A2USCPU(S1), A2ASCPU(S1/S30).

POINT

(1) The following 3 instructions dedicated to the AnUCPU can be used by adding to the existing sequence program.
- ZNWR instruction
  ..... For writing word devices of MELSECNET/10 connection station
- ZNRD instruction
  ..... For reading word devices of MELSECNET/10 connection station
- ZCOM instruction
  ..... For MELSECNET/10 network refresh instruction

(2) All of the sequence programs for the A1SHCPU and A2SHCPU can be used.

(3) The following instructions are inexecutable for the A2USHCPU-S1, A2USCPU(S1) and A2ASCPU(S1/S30).
Note that, if the instructions are used by mistake, they are handled differently among the A2USHCPU-S1, A2USCPU(S1) and A2ASCPU(S1/S30).

Item	A2USHCPU-S1	A2USCPU(S1), A2ASCPU(S1/S30)
LED, LEDC instruction	No error occurs.	"INSTRCTCODE ERR." occurs.
CHG instruction	Error code 13 occurs.	Error code 10 occurs.

(4) When frequently executing the FROM/TO instruction to special function module in short scan time, the targeted module may not be processed normally.
When executing the FROM/TO instruction, match the processing time and conversion time of the special function module using timer or constant scanning.

Appendix4.1 Instructions with different specifications

This section explains how to modify the sequence program when instructions with different specifications are used.

Basically, the instructions which are not listed in this section do not require modifications.

(1) CHK instruction.....Modifications are required when the A1SHCPU or A2SHCPU is used in the refresh mode.

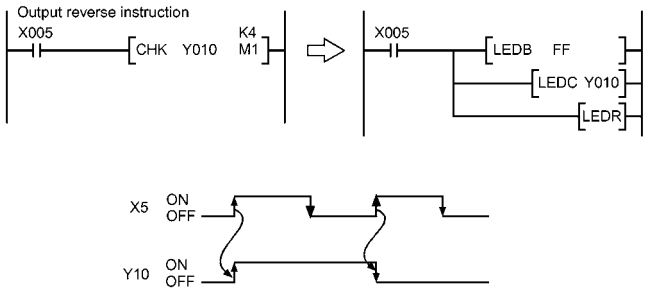

(2) DI/EI instruction ..... Modifications are required when the special relay M9053 is ON.

- When M9053 has been turned ON, the Enable/Disable setting of the link refresh instruction (EI, DI) are excutable.
- As the A2USHCPU-S1, A2USCPU(S1) and A2ASCPU(S1/S30) perform the link refresh in the END processing, enabling or disabling the link refresh during the sequence program execution is not allowed.
  Therefore, modify the sequence program.

(3) LEDA/LEDB instruction

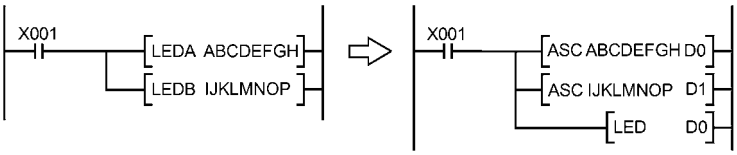

(4) SUB, SUBP instruction ..... Unusable

- As the A2USCHCPU-S1, A2USCPU(S1) and A2ASCPU(S1/S30) cannot store the microcomputer program, the SUB instruction is inexecutableA2USHCPU-S1, A2USCPU(S1).
- For use in the A2USHCPU-S1,A2USCPU(S1) or A2ASCPU(S1/S30), all the data processed in the microcomputer program area must be changed into those of the dedicated instrutions.

Appendix4.2 Special relays and special registers with different specifications

The A2USHCPU-S1, A2USCPU(S1) and A2ASCPU(S1/S30) do not use the following special relays and special registers.

Although no error occurs even if the following special relays and registers in the original program remains in the newly created program (they will be ignored), it is recommended to delete them from the program.

- M9010 ..... Turns ON when an operation error occurs and OFF when the error is removed.
- M9053 ..... Turns ON when executing the EI instruction with the link refresh enable instruction or the program interrupt enable instruction and the DI instruction with the link refresh disable instruction or the program interrupt disable instruction.

Appendix4.3 Parameter setting

The parameters set in the existing CPU module can be utilized without any modification if none of them meets the following conditions.

Setting items	Description
Microcomputer program capacity	The microcomputer program area of the A2USHCPU-S1, A2USCPU(S1) and A2ASCPU(S1/S30) is dedicated for the SFC. The "PARAMETER ERROR" occurs if a utility package for the microcomputer program is stored in the microcomputer program area of the existing CPU module.
Registering the model name of the module by the I/O assignment By the system FD compatible with the A2USHCPU-S1, A2USCPU(S1) and A2ASCPU(S1/S30).	When the AD57 module or AD57-S1 module is used in the existing system, the utility package of the SW-AD57P is stored in the microcomputer program area. The utility package mentioned above cannot be stored in the A2USHCPU-S1, A2USCPU(S1) and A2ASCPU(S1/S30) as it does not have a microcomputer program area. To realize functions of this utility package, dedicated instructions for the special function modules are provided for the A2USHCPU-S1, A2USCPU(S1) and A2ASCPU(S1/S30). To use the dedicated instructions of the A2USHCPU-S1, A2USCPU(S1) and A2ASCPU(S1/S30), model names of the modules must be registered by the I/O assignment of the parameters in advance. Conclusion: When the AD57 or AD57-S1 exists, be sure to register the model name of the module by the system FD which is compatible with the A2USHCPU-S1, A2USCPU(S1) and A2ASCPU(S1/S30).

The processing of the following items is different from the parameter setting of the existing CPU module.

- Watchdog timer setting ..... The set time is ignored, and 200ms is applied.
- Interrupt counter setting ..... The interrupt counter set by the A1SHCPU and A2SHCPU are ignored and treated as a normal counter by the sequence program.

Appendix4.4 I/O control method

The I/O control method of the A2USHCPU-S1,A2USCPU(S1) and A2ASCPU(S1/S30) is the refresh method (partial direct I/O depending on the instruction), and is different from that of the A1SHCPU and A2SHCPU. Therefore pay attention to the input timing of the input (X) and the output timing of the output (Y).

(1) Pulse processing program by the SET/RST instruction
To make the A2USHCPU-S1, A2USCPU(S1) and A2ASCPU(S1/S30) execute the pulse output used in the direct method by the SET/RST instruction in the A1SHCPU or A2SHCPU, create the program as follows:

For direct method of the A1SHCPU and A2SHCPU

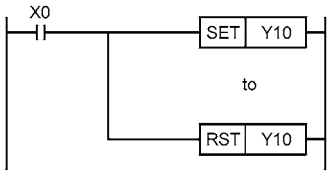

(a) When the ACPU common instructions are used:

For A2USHCPU-S1,A2USCPU(S1),A2ASCPU(S1/S30)

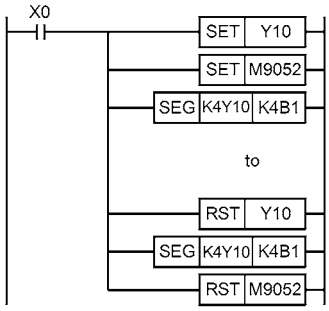

(b) When the dedicated instructions for the A2USHCPU-S1, A2USCPU(S1) or A2ASCPU(S1/S30) are used:

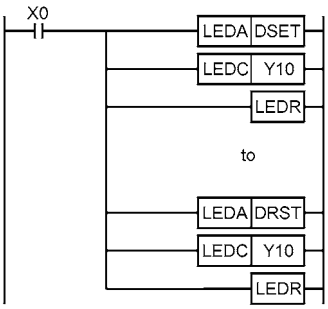

POINT
When a special function module such as the AD61(S1) high-speed counter module is used, use the above program if outputting the pulse signals to the module is required.

Appendix4.5 Microcomputer program

Since the A2USHCPU-S1, A2USCPU(S1) and A2ASCPU(S1/S30) do not have the microcomputer mode, the utility software packages and user-created microcomputer programs used for the A1SHCPU and A2SHCPU are not available. (The microcomputer program area for A2USHCPU-S1, A2USCPU(S1) and A2ASCPU(S1/S30) is dedicated for the SFC.)

When the utility software packages or the microcomputer programs above are used, delete all of the SUB instructions (microcomputer program call) used for executing them from the sequence program.

When the following utility packages are used, modify the program using the A2USHCPU-S1, A2USCPU(S1) and A2ASCPU(S1/S30) dedicated instructions.

1) SW□-AD57P .....AnACPU/AnUCPU Programming Manual (AD57) IB-66257
   (Usable for creating the canvas and character generators.
2) SW □-UTLP-FNO .....AnSHCPU/AnACPU/AnUCPUQCPU-A (A mode) Programming Manual (Dedicated Instructions) IB-66251
3) SW □-UTLP-PID .....AnACPU/AnUCPU Programming Manual (PID Control Instructions) IB66258
4) SW□-SIMA
5) SW□-UTLP-FDI } Unusable
6) SW□-SAPA

Appendix4.6 Processing of the index register

The index register of the A2USHCPU-S1, A2USCPU(S1) and A2ASCPU(S1/S30) is rewritten to the value prior to the execution of the interrupt program when the processing is transferred to the main or sequence program even if the value was updated by the interrupt program.

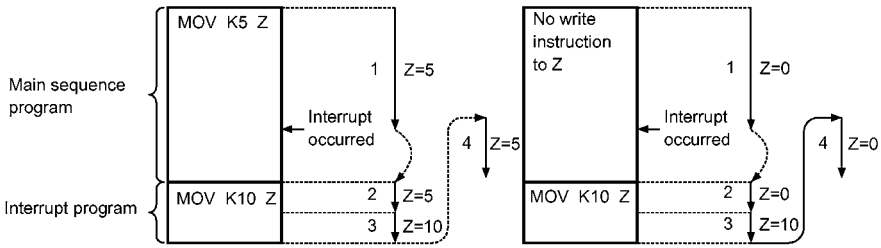

Appendix5 External Dimensions

Appendix5.1 A2USHCPU-S1, A2USHCPU, A2USCPU, A2USCPU-S1, A2ASCPU, A2ASCPU-S1, A2ASCPU-S30 modules

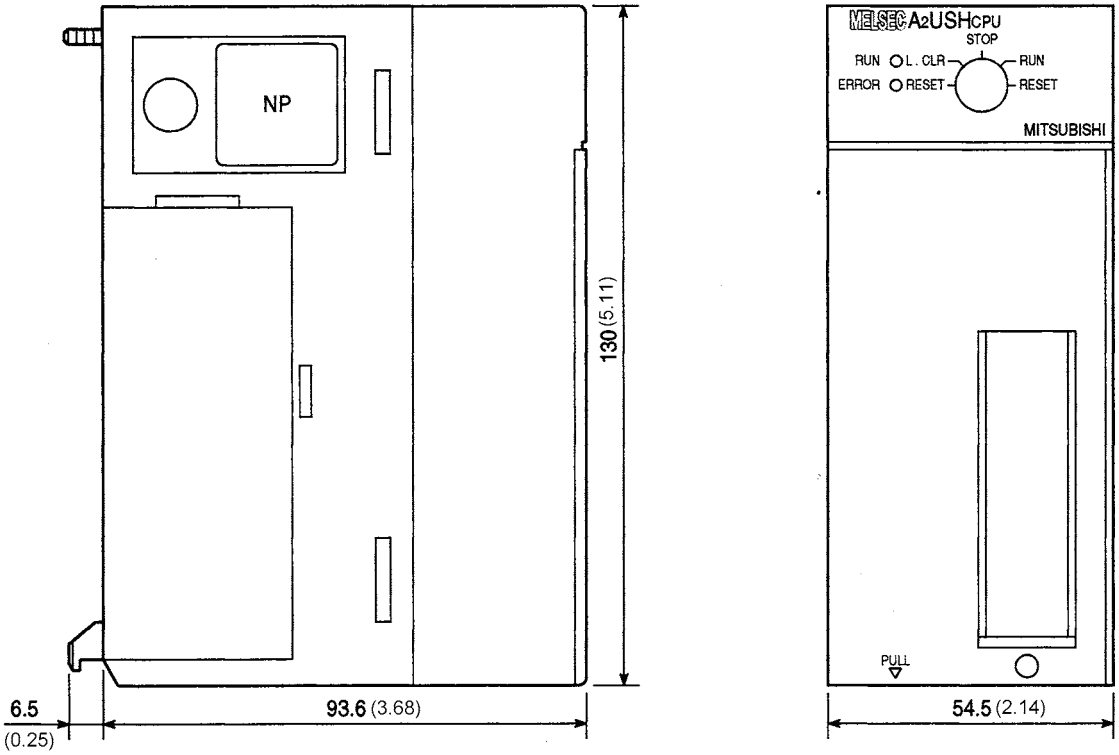

Unit : mm (inch)

Appendix5.2 A1S61PN, A1S62PN and A1S63P power supply modules

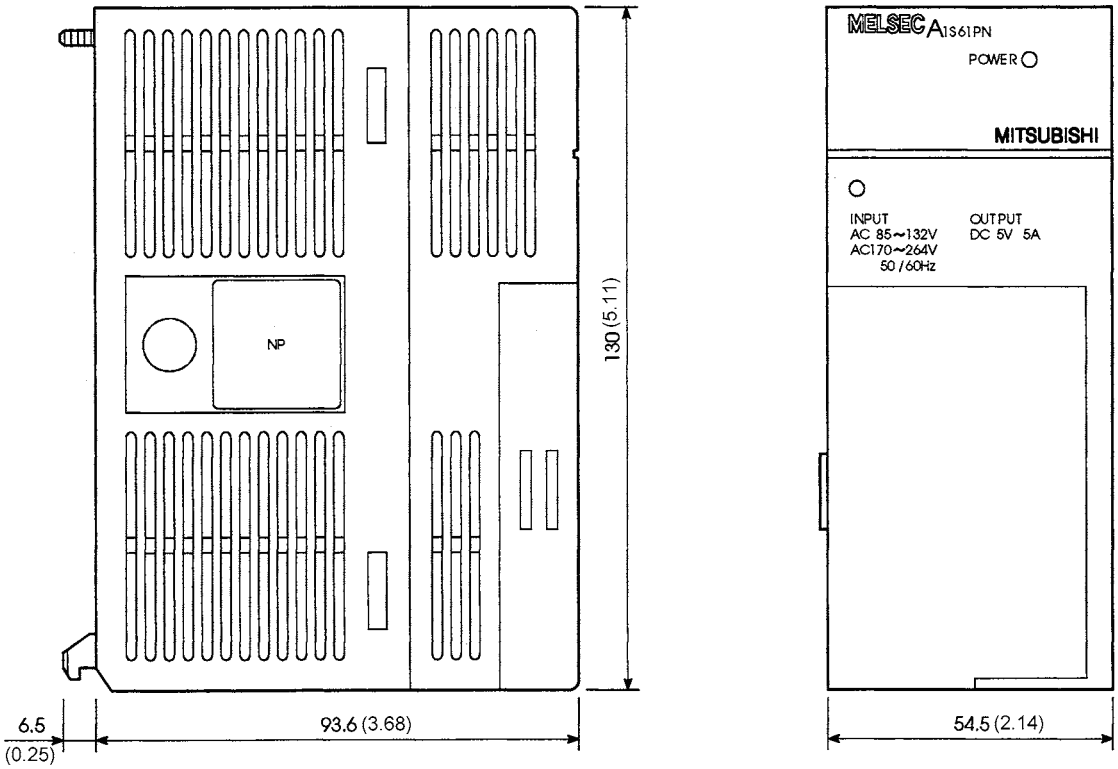

Unit : mm (inch)

Appendix5.3 Main base unit

Appendix5.3.1 A1S32B main base unit

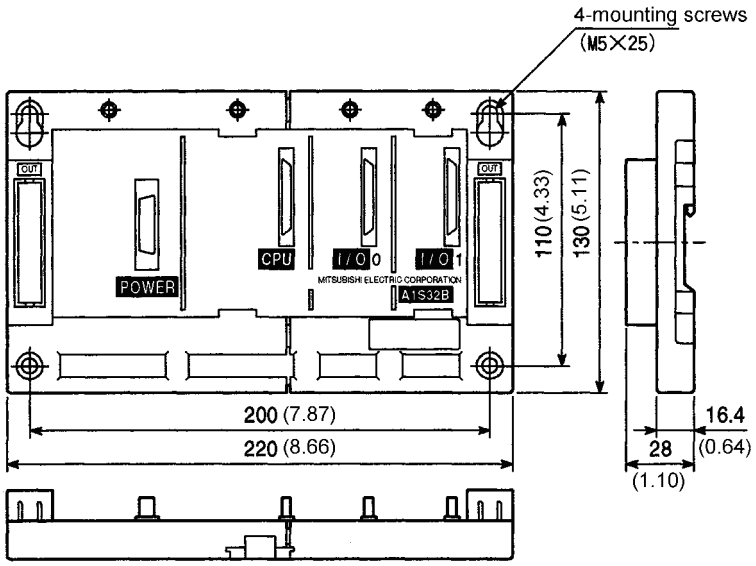

Unit : mm (inch)

Appendix5.3.2 A1S33B main base unit

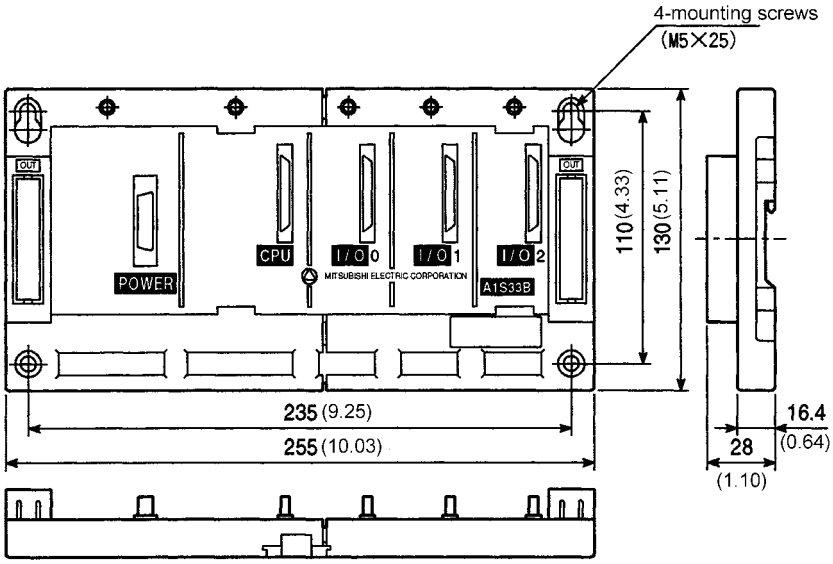

Unit : mm (inch)

Appendix5.3.3 A1S35B main base unit

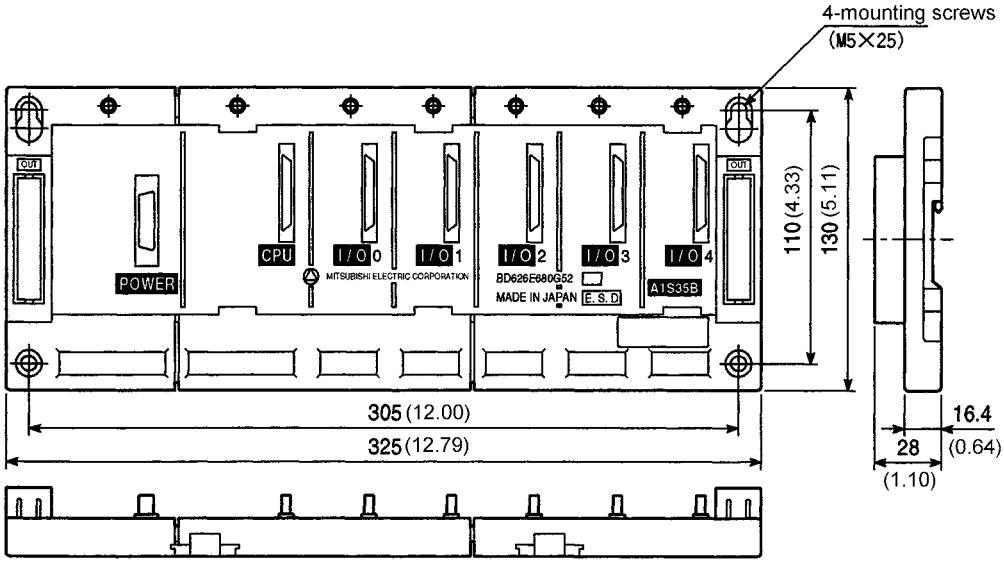

Unit : mm (inch)

Appendix5.3.4 A1S38B main base unit

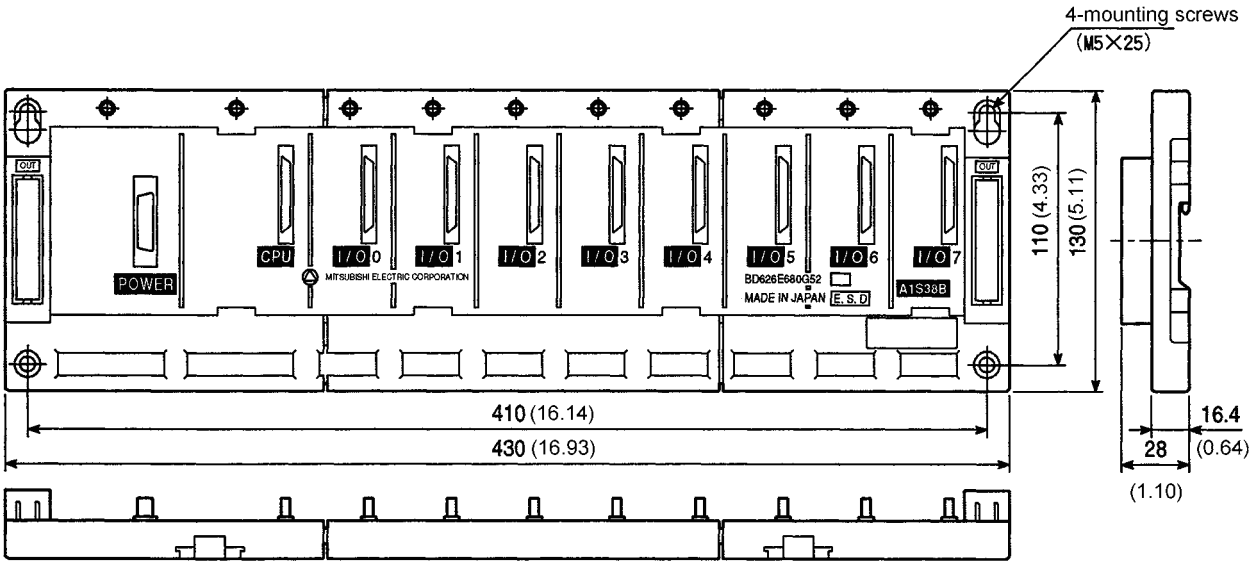

Unit : mm (inch)

Appendix5.4 Extension base unit

Appendix5.4.1 A1S65B extension base unit

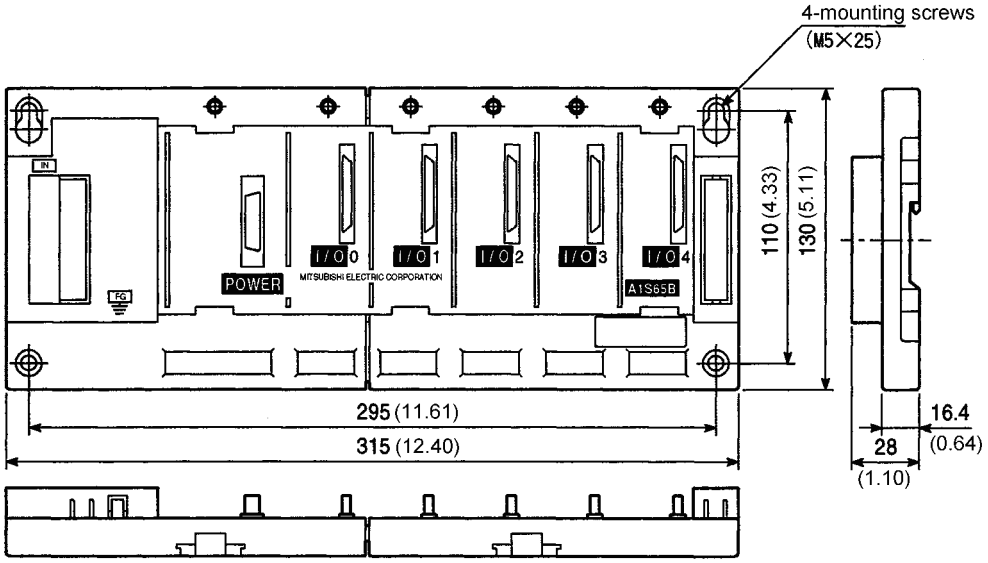

Unit : mm (inch)

Appendix5.4.2 A1S68B extension base unit

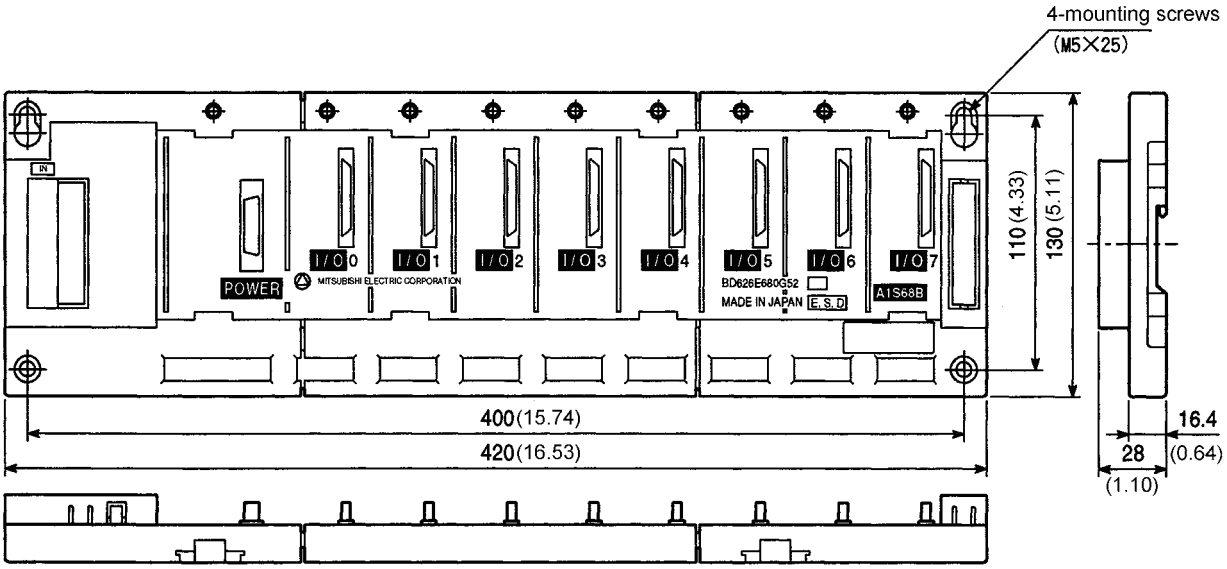

Unit : mm (inch)

Appendix5.4.3 A1S52B extension base unit

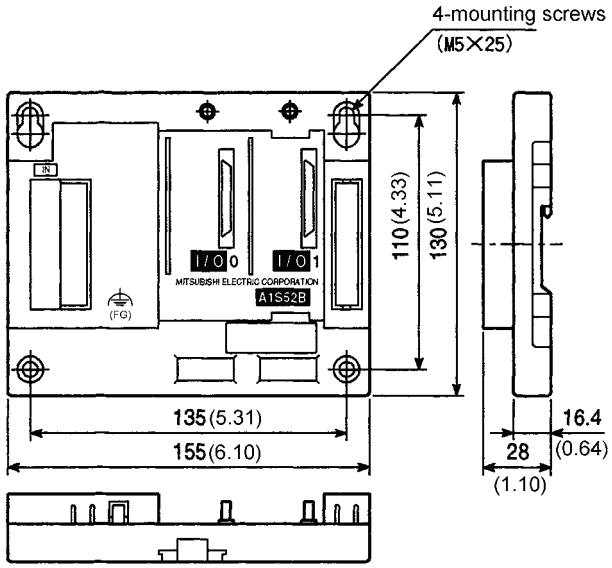

Unit : mm (inch)

Appendix5.4.4 A1S55B extension base unit

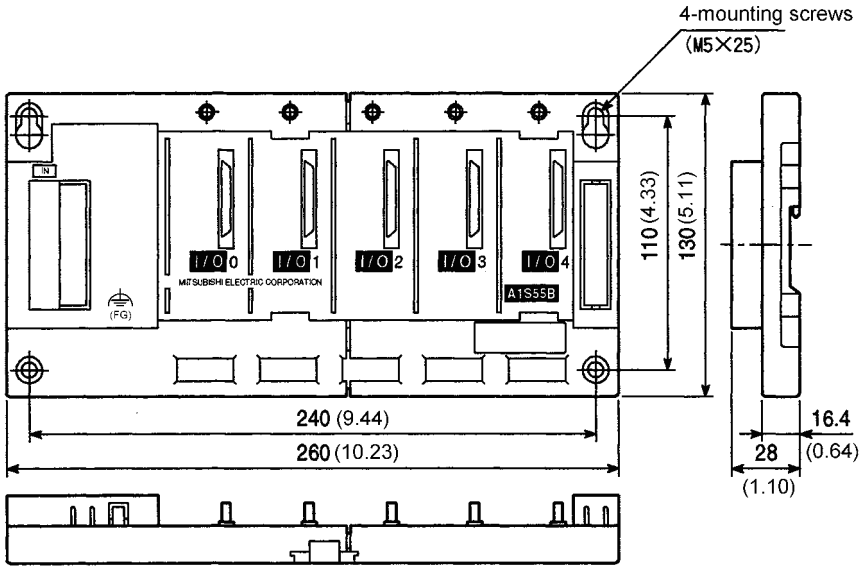

Unit : mm (inch)

Appendix5.4.5 A1S58B extension base unit

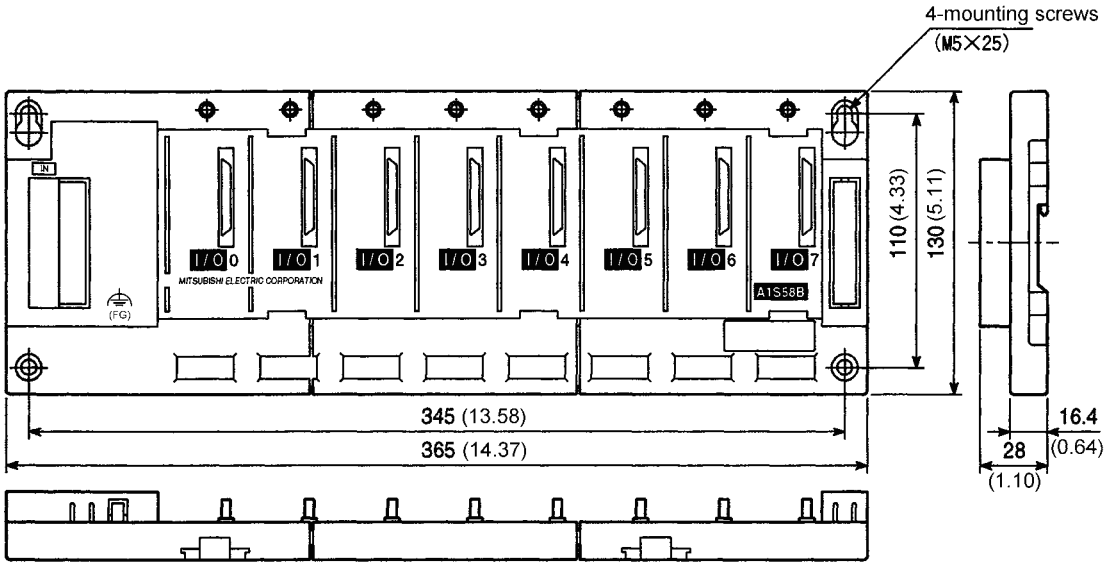

Unit : mm (inch)

Appendix5.4.6 A1S65B-S1 extension base unit

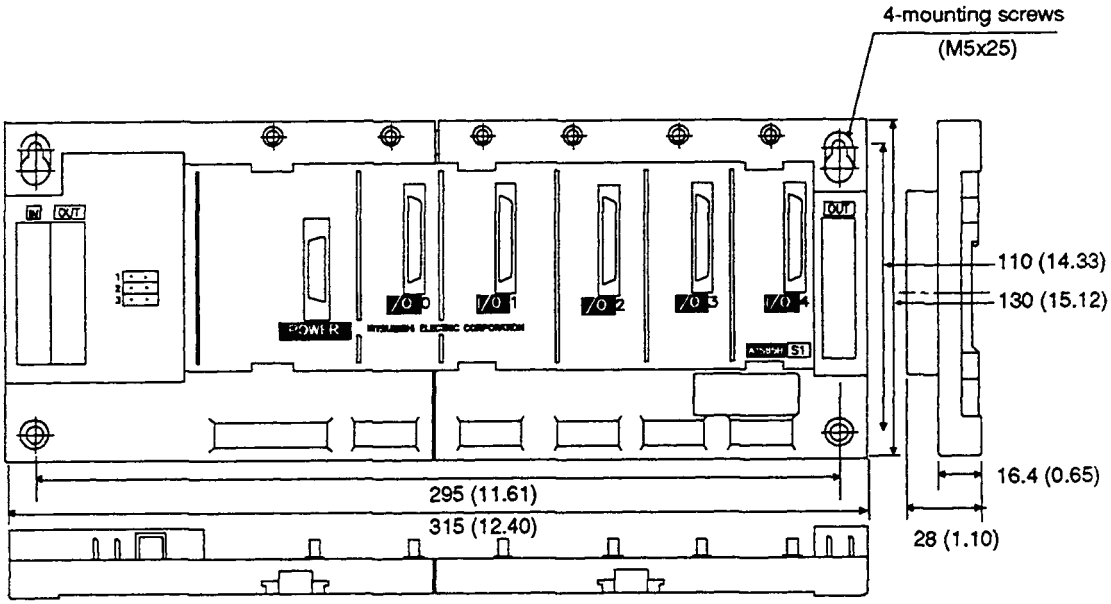

Unit : mm (inch)

Appendix5.4.7 A1S68B-S1 extension base unit

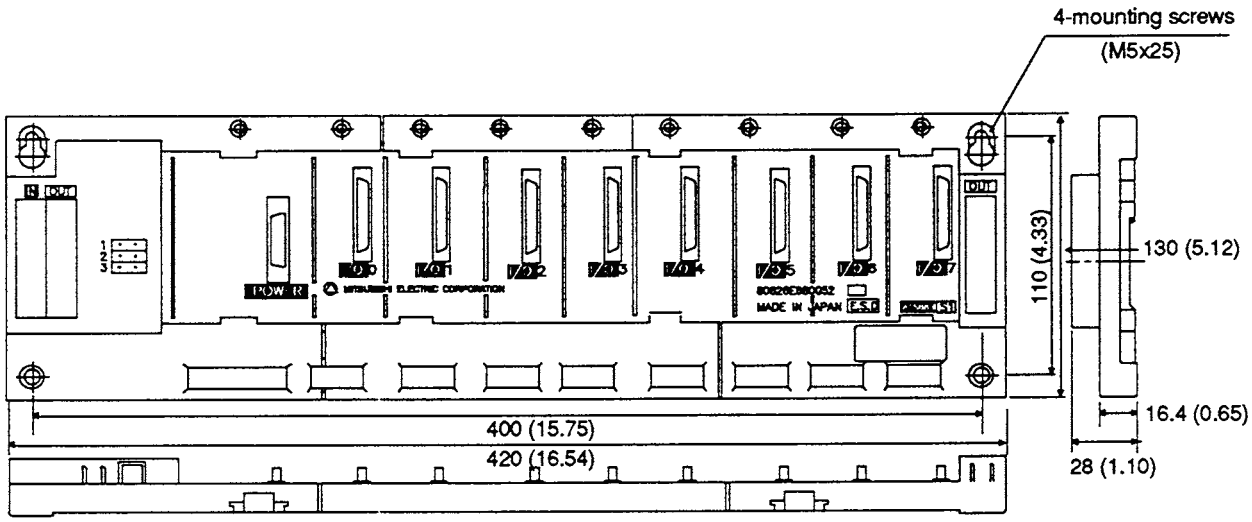

Unit : mm (inch)

Appendix5.4.8 A1S52B-S1 extension base unit

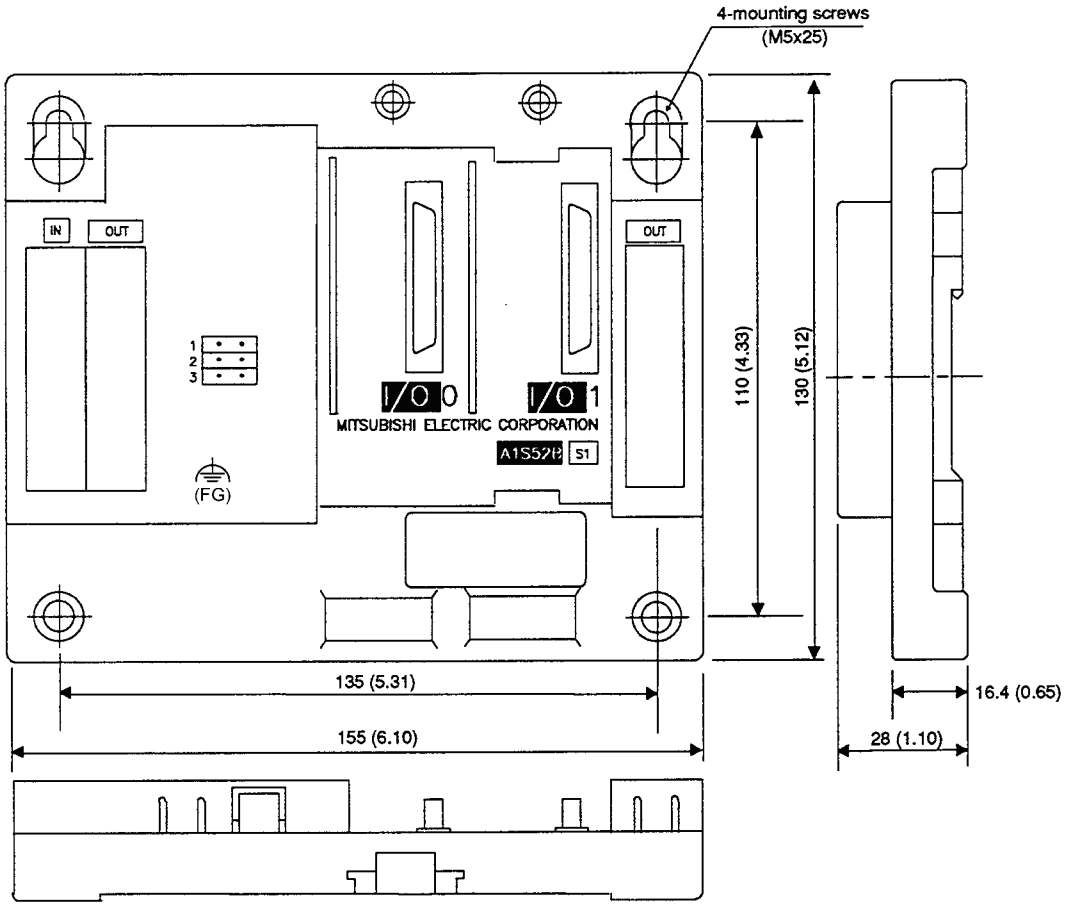

Unit : mm (inch)

Appendix5.4.9 A1S55B-S1 extension base unit

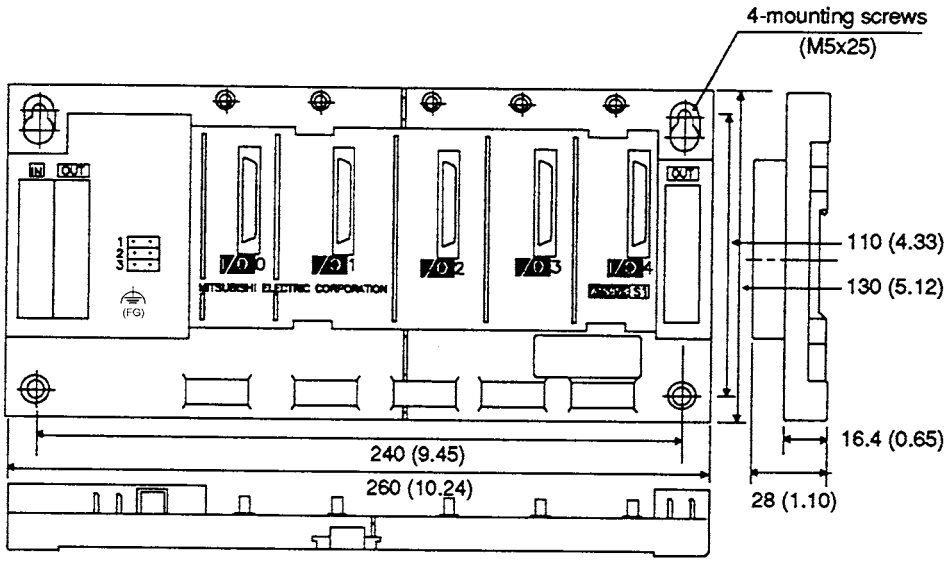

Unit : mm (inch)

Appendix5.4.10 A1S58B-S1 extension base unit

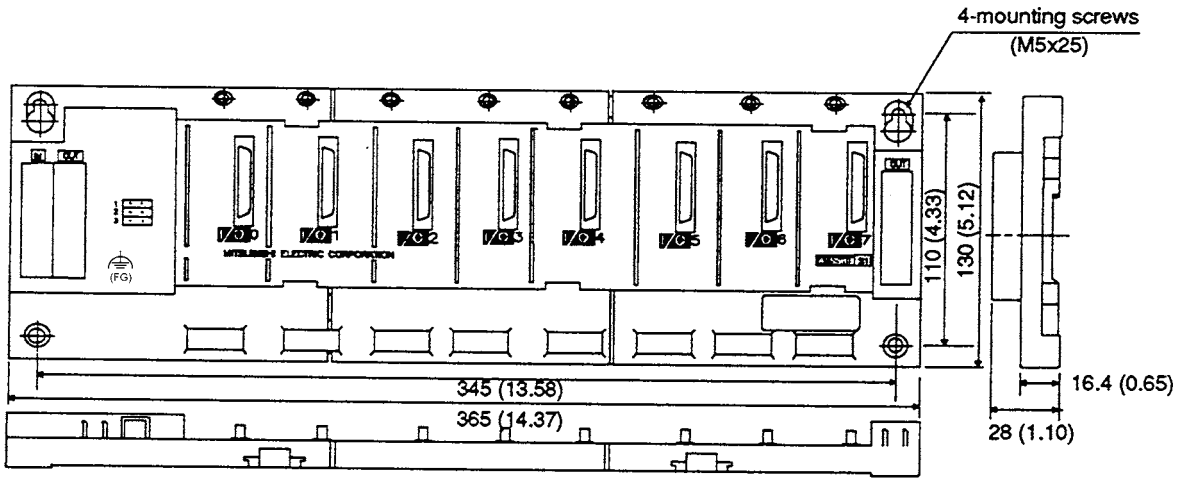

Unit : mm (inch)

Appendix5.5 Memory cassette

Appendix5.5.1 A2SNMCA-30KE memory cassette

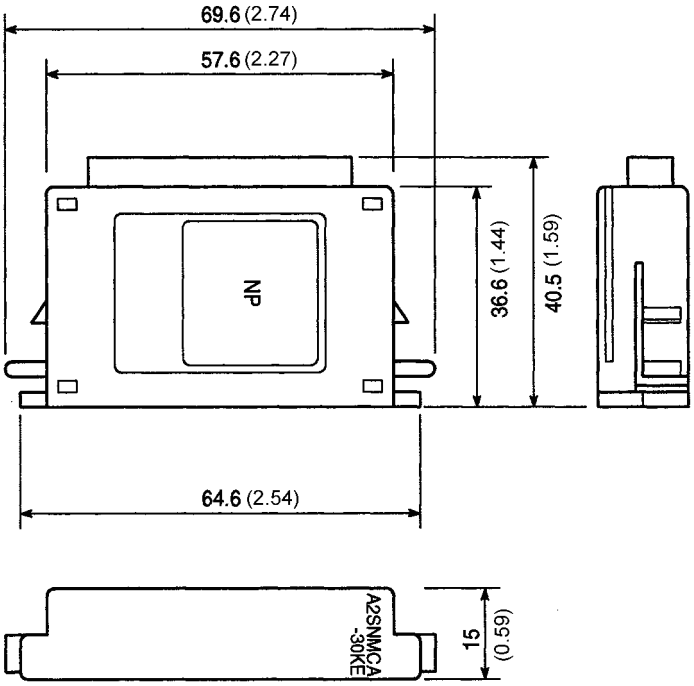

Unit : mm (inch)

Appendix6 Transportation Precautions

When transporting lithium batteries, make sure to handle them based on the transportation regulations.

Appendix6.1 Relevant models

The batteries used for CPU modules are classified as follows:

Product Name	Model Name	Description	Handling Category
A series battery	A6BAT	Lithium battery	Non-dangerous goods

Appendix6.2 Transportation Guidelines

Products are packed properly in compliance with the transportation regulations prior to shipment. When repacking any of the unpacked products to transport it to another location, make sure to observe the IATA Dangerous Goods Regulations, IMDG Code and other local transportation regulations.

For details, please consult your transportation company.

Appendix7 Handling of Batteries and Devices with Built-in Batteries in EU Member States

This section describes the precautions for disposing of waste batteries in EU member states and exporting batteries and/or devices with built-in batteries to EU member states.

Appendix7.1 Disposal precautions

In EU member states, there is a separate collection system for waste batteries. Dispose of batteries properly at the local community waste collection/recycling center.

The following symbol is printed on the batteries and packaging of batteries and devices with built-in batteries used for Mitsubishi programmable controllers.

Note: This symbol is for EU member states only.
The symbol is specified in the new EU Battery Directive (2006/66/EC) Article 20 "Information for end-users" and Annex II.

The symbol indicates that batteries need to be disposed of separately from other wastes.

Appendix7.2 Exportation precautions

The new EU Battery Directive (2006/66/EC) requires the follwoing when marketing or exporting batteries and/or devices with built-in batteries to EU member states.

- To print the symbol on batteries, devices, or their packaging
- To explain the symbol in the manuals of the products

(1) Labelling

To market or export batteries and/or devices with built-in batteries, which have no symbol, to EU member states on September 26, 2008 or later, print the symbol shown on the previous page on the batteries, devices, or their packaging.

(2) Explaining the symbol in the manuals

To export devices incorporating Mitsubishi programmable controller to EU member states on September 26, 2008 or later, provide the latest manuals that include the explanation of the symbol.

If no Mitsubishi manuals or any old manuals without the explanation of the symbol are provided, separately attach an explanatory note regarding the symbol to each manual of the devices.

POINT
The requirements apply to batteries and/or devices with built-in batteries manufactured before the enforcement date of the new EU Battery Directive (2006/66/EC).

INDEX

[A]

Accumulator [A] 4-2,4-5
Allowable period of momentary power failure 4-3,4-6
Annunciator [F] 4-2,4-5

[B]

Base Unit
  Installation and Removal of the Base Units 8-11
  Installing the Base Units 8-9
Base unit
  External Dimensions of Base Unit App-60
  Parts names 6-7
Battery
  Battery installation 7-7
  Battery Replacement 10-4
  replaement procedure 10-6
  Service life 10-4
  Standard replacement timing 10-4

[C]

Calculation of Heat Amount 8-7
Category II 9-11
Circuit
  Fail-Safe Circuit 8-4,8-5
  System design circuit example 8-3
Clock function 4-3,4-6
Constant scan 4-1,4-4
Control method 4-1,4-4
Counter [C] 4-2,4-5
CPU module
  External Dimensions App-58
  Installation and Removal 8-11
  Performance Specifications 4-1

[D]

Dairy Inspection 10-2
Data register [D] 4-2,4-5
Device
  Accumulator [A] 4-2,4-5
  Annunciator [F] 4-2,4-5
  Counter [C] 4-2,4-5
  Data register [D] 4-2,4-5
  File register [R] 4-2,4-5
  Index register [V, Z] 4-2,4-5
  Internal relay [M] 4-2,4-5
  Interrupt pointer [I] 4-2,4-5
  Latch relay [L] 4-2,4-5
  Link register [W] 4-2,4-5
  Link relay [B] 4-2,4-5
  Pointer [P] 4-2,4-5
  Special register [D] 4-2,4-5
  Special relay [M] 4-2,4-5
  Step relay [S] 4-2,4-5
  Timer [T] 4-2,4-5
Device List 4-17
Device points 4-2,4-5

[E]

EMC DIRECTIVES 9-1
END processing 4-7
Error Code List 11-11
External Dimensions
  CPU module App-58
  Extension Base Unit App-62
  Main Base Unit App-60
  Memory Cassette App-67
  Power supply module App-59
External dimensions 4-3,4-6

[F]

Fail-Safe
  Fail-Safe Circuit 8-4
  Fail-safe measures 8-4
Fault Examples with I/O Modules 11-23
Faults in the output circuit 11-25
Faults with the input circuit and the corrective actions 11-23
Features 1-2
Ferrite core 9-8
File register [R] 4-2,4-5
Function List 4-42
Fundamentals of Troubleshooting 11-1

[H]

Hardware 2-3

[I]

Index register [V, Z] 4-2,4-5

Initial processing 4-7
Installation and Removal of the Dustproof Cover 8-14
Installation Environment 8-6
Instantaneous power failure 4-12
Instruction List APP-1
Instructions with different specifications App-52
Intensive insulation 9-13
Internal power consumption 4-3,4-6
Internal relay [M] 4-2,4-5
Interrupt pointer [I] 4-2,4-5
I/O assignment of special function modules ... 4-36
I/O control mode 4-1,4-4
I/O devices 4-35

[L]
Latch clear operation 4-48
Latch relay [L] 4-2,4-5
Latch (power failure compensation) range . 4-3,4-6
LED
Name of the LED 4-46,5-4
"ERROR" LED is flickering 11-7
"ERROR" LED is turned ON 11-6
"POWER" LED is turned OFF 11-3
"RUN" LED is flickering 11-5
"RUN" LED is turned OFF 11-4
Link register [W] 4-2,4-5
Link relay [B] 4-2,4-5
LOW VOLTAGE DIRECTIVES 9-1,9-10

[M]
Maximum number of extension 2-29
Maximum number of extension stages 2-28
MELSECNET/MINI-S3 auto refresh processing 4-37
Memory capacity 4-1,4-4,4-22
Memory cassette
Installation and removal of memory cassette 7-3
Memory cassette handling precautions 7-2
Specifications of the memory cassette 7-1
Microcomputer program App-56
Module
Installation 8-12
Removal 8-13

[N]
Noise filter 9-9
Notes
Battery handling precautions 7-6
CPU module handling precautions 4-44
DESIGN PRECAUTIONS A-1
DISPOSAL PRECAUTIONS A-7
Memory cassette handling precautions 7-2
Precaustions for Utilizing the Existing Sequence Programs App-51
Precautions for using coaxial cables 9-4
Precautions When Configuring the System ... 2-3
Precautions when Connecting the Uninterruptible Power Supply 8-22
Precautions when installing PC 8-9
Precautions when using A8PU peripheral devices 2-10
Precautions when using GPP function software packages which are not compatible with AnU 2-10
Precautions when using the MELSEC-AnS series PLC 9-10
STARTUP AND MAINTENANCE PRECAUTIONS A-5
Transportation Precautions App-68
USER PRECAUTONS A-14
Wiring instructions 8-16
Number of I/O device points 4-1,4-4
Number of I/O points 4-1,4-4

[O]
Operation standard of extension base unit 6-3
Overall Configuration 2-1
Overview of operation processing 4-7

[P]
Parameter setting App-54
List of parameter setting range 4-19
Parameter Setting Ranges 4-19
Part Names
Parts names 5-4,6-7
Parts names and setting 4-45
PAUSE status 4-10
Periodic inspection 10-3
Peripheral Device App-46
Pointer [P] 4-2,4-5
Power consumption 4-3,4-6
Power supply module
External Dimensions App-59
Parts names 5-4
Power supply module selection 5-3

Procedure to read an error code 11-11
Processing of the index register App-57
Processing speed 4-1,4-4
Program capacity..... 4-1,4-4
Programming language 4-1,4-4

[R]
Relevant Models.....App-68
Remote RUN/PAUSE contacts..... 4-3,4-6
Retentive timer 4-2,4-5
RUN status 4-10
STOP status 4-10

[S]
Self-diagnostics functions..... 4-13
Setting ranges of timer and counter 4-33
Settings for memory protect switch 4-47
Settings for memory protection switch..... 7-5
Software package..... 2-7
Special register [D] 4-2,4-5
Special relay [M] 4-2,4-5
Special relays and special registers with different specifications App-53
Specifications
  Battery specifications 7-6
  Extension cable specifications 6-2
  Performance Specifications 4-1
  SPECIFICATIONS 3-1
  Specifications of the memory cassette 7-1
Standard
  EMC DIRECTIVES 9-1
  LOW VOLTAGE DIRECTIVES 9-1,9-10
Step relay [S] 4-2,4-5
STEP-RUN 4-10
Surge absorber for lightening 8-18
System configuration
  Precautions When Configuring the System .. 2-3
  System Configuration Overview..... 2-27
System Equipment 2-12

[T]
Timer [T] 4-2,4-5
Troubleshooting flowchart
  Flow for actions when the output module's output load does not turn ON..... 11-8
  Flow for actions when the program cannot be written 11-9
  Flow for actions when the "ERROR" LED is flickering..... 11-7
  Flow for actions when the "ERROR" LED is turned ON 11-6
  Flow for actions when the "POWER" LED is turned OFF 11-3
  Flow for actions when the "RUN" LED is flickering 11-5
  Flow for actions when the "RUN" LED is turned OFF.....11-4

[W]
Weight
  CPU module 4-3,4-6
  Extension cable 6-2
  Memory cassette 7-1
Wiring
  Wiring I/O equipments 8-19
  Wiring to the module terminals 8-21
Wiring I/O equipments.....8-19
Wiring to the module terminals.....8-21

Numerics
5VDC internal power consumption..... 4-3,4-6

Memo

Warranty

Please confirm the following product warranty details before using this product.

1. Gratis Warranty Term and Gratis Warranty Range

If any faults or defects (hereinafter "Failure") found to be the responsibility of Mitsubishi occurs during use of the product within the gratis warranty term, the product shall be repaired at no cost via the sales representative or Mitsubishi Service Company.

However, if repairs are required onsite at domestic or overseas location, expenses to send an engineer will be solely at the customer's discretion. Mitsubishi shall not be held responsible for any re-commissioning, maintenance, or testing on-site that involves replacement of the failed module.

[Gratis Warranty Term]

The gratis warranty term of the product shall be for one year after the date of purchase or delivery to a designated place.

Note that after manufacture and shipment from Mitsubishi, the maximum distribution period shall be six (6) months, and the longest gratis warranty term after manufacturing shall be eighteen (18) months. The gratis warranty term of repair parts shall not exceed the gratis warranty term before repairs.

[Gratis Warranty Range]

(1) The range shall be limited to normal use within the usage state, usage methods and usage environment, etc., which follow the conditions and precautions, etc., given in the instruction manual, user's manual and caution labels on the product.

(2) Even within the gratis warranty term, repairs shall be charged for in the following cases.

1. Failure occurring from inappropriate storage or handling, carelessness or negligence by the user. Failure caused by the user's hardware or software design.
2. Failure caused by unapproved modifications, etc., to the product by the user.
3. When the Mitsubishi product is assembled into a user's device, Failure that could have been avoided if functions or structures, judged as necessary in the legal safety measures the user's device is subject to or as necessary by industry standards, had been provided.
4. Failure that could have been avoided if consumable parts (battery, backlight, fuse, etc.) designated in the instruction manual had been correctly serviced or replaced.
5. Failure caused by external irresistible forces such as fires or abnormal voltages, and Failure caused by force majeure such as earthquakes, lightning, wind and water damage.
6. Failure caused by reasons unpredictable by scientific technology standards at time of shipment from Mitsubishi.
7. Any other failure found not to be the responsibility of Mitsubishi or that admitted not to be so by the user.

2. Onerous repair term after discontinuation of production

(1) Mitsubishi shall accept onerous product repairs for seven (7) years after production of the product is discontinued.

Discontinuation of production shall be notified with Mitsubishi Technical Bulletins, etc.

(2) Product supply (including repair parts) is not available after production is discontinued.

3. Overseas service

Overseas, repairs shall be accepted by Mitsubishi's local overseas FA Center. Note that the repair conditions at each FA Center may differ.

4. Exclusion of loss in opportunity and secondary loss from warranty liability

Regardless of the gratis warranty term, Mitsubishi shall not be liable for compensation of damages caused by any cause found not to be the responsibility of Mitsubishi, loss in opportunity, lost profits incurred to the user by Failures of Mitsubishi products, special damages and secondary damages whether foreseeable or not , compensation for accidents, and compensation for damages to products other than Mitsubishi products, replacement by the user, maintenance of on-site equipment, start-up test run and other tasks.

5. Changes in product specifications

The specifications given in the catalogs, manuals or technical documents are subject to change without prior notice.

6. Product application

(1) In using the Mitsubishi MELSEC programmable controller, the usage conditions shall be that the application will not lead to a major accident even if any problem or fault should occur in the programmable controller device, and that backup and fail-safe functions are systematically provided outside of the device for any problem or fault.

(2) The Mitsubishi programmable controller has been designed and manufactured for applications in general industries, etc. Thus, applications in which the public could be affected such as in nuclear power plants and other power plants operated by respective power companies, and applications in which a special quality assurance system is required, such as for Railway companies or Public service purposes shall be excluded from the programmable controller applications.

In addition, applications in which human life or property that could be greatly affected, such as in aircraft, medical applications, incineration and fuel devices, manned transportation, equipment for recreation and amusement, and safety devices, shall also be excluded from the programmable controller range of applications.

However, in certain cases, some applications may be possible, providing the user consults their local Mitsubishi representative outlining the special requirements of the project, and providing that all parties concerned agree to the special circumstances, solely at the users discretion.

Type A2USHCPU-S1/A2USCPU(S1)/A2ASCPU(S1/S30)

User's Manual

MODEL	A2USHCPU-S1-U-E
MODEL CODE	13JL30
IB(NA)-66789-G(0810)MEE	

MITSUBISHI ELECTRIC CORPORATION

HEAD OFFICE : TOKYO BUILDING, 2-7-3 MARUNOUCHI, CHIYODA-KU, TOKYO 100-8310, JAPAN
NAGOYA WORKS : 1-14 , YADA-MINAMI 5-CHOME , HIGASHI-KU, NAGOYA , JAPAN

When exported from Japan, this manual does not require application to the Ministry of Economy, Trade and Industry for service transaction permission.

Specifications subject to change without notice.